Perc-Rite® Drip Dispersal
Design Manual
Vermont

OAKSON

YOUR DRIP DISPERSAL EXPERT IN NEW ENGLAND

VERMONT
DEPARTMENT OF ENVIRONMENTAL CONSERVATION
Drinking Water & Groundwater Protection Division
THIS IS SUBJECT TO PROVISIONS OR CONDITIONS LISTED IN PERMIT
Permit #: 2014-01-R2
Date: August 18, 2020

VERMONT

PERC-RITE®
DRIP DISPERSAL
DESIGN GUIDE

For systems using septic tank effluent or filtrate effluent with flows under 6,500 GPD as allowed by the Wastewater System and Potable Water Supply Rules and the Perc-Rite® Drip Dispersal System Approval

This Perc-Rite® Drip Dispersal System Design Guide contains:

1. Introduction
    a. The Design Guide
    b. Overview of System Operation
2. Key System Components
3. Design
    a. General Design Components
    b. Vermont-Specific Requirements
    c. Specific Leachfield Design Requirements
4. Design Procedures
5. Conclusion
6. Checklist Prior to Submission
7. Vermont Vendors

Copyright © 2015-2020 Oakson, Inc., Gloucester, Massachusetts

1. INTRODUCTION

The Perc-Rite® Drip Dispersal System is a non-invasive, flexible and environmentally sensitive means of wastewater dispersal. Perc-Rite® is the only drip dispersal brand approved for both septic tank and treated effluent in Vermont and has garnered acclaim for its projects throughout the region. This technology has been advanced and refined to incorporate the latest concepts in soils-based wastewater treatment in its 30+ year usage history.

Oakson is the New England distributor of the Perc-Rite® Drip Dispersal System and provides assistance with design, installation and operation. Oakson's partnership in Vermont with Advanced Onsite Services has brought local, dedicated expertise for hands-on assistance with design, installation and operation to the region.

Contact information, technical specifications and other valuable resources can be found on Oakson's website at www.Oakson.com and at Advanced Onsite Services' website at www.aoservices.biz.

This technology has an approval letter issued by the Vermont Department of Environmental Conservation allowing use with septic tank effluent, and is allowed for use with filtrate effluent pursuant to the Wastewater System and Potable Water Supply Rules (WW Rules) Section 1-923. The approval letter was initially issued June 23, 2014 (with subsequent renewals) and is available on Oakson's website.

We are proud to share that each Perc-Rite® Drip Dispersal System is assembled in the United States, contains a number of innovative and patented components, and each Hydraulic Unit is factory-tested before shipment to assure proper operation at start-up. Additionally, the components are covered by a manufacturer-provided one year product warranty.

Copyright © 2015-2020 Oakson, Inc., Gloucester, Massachusetts

a. The Design Guide

This Design Guide will assist you in specifying a Perc-Rite® Drip Dispersal System focusing on designs typically seen on a residential scale such as a single family house or a small apartment building. Since flows of under 1,000 GPD are most common, the information in this Design Guide is targeted to that type of project. Please consult directly with Oakson for design assistance with larger-sized Perc-Rite® Drip Dispersal System projects or aspects of your design which might not fit within this basic Design Guide.

b. Perc-Rite® Drip Dispersal System Overview

Perc-Rite® Drip Dispersal is a pre-engineered, integrated package of components which incorporate timer-based dosing of low application rate emitters with filtration and automatic flushing to protect the drip tubing from clogging. The pump is capable of handling a range of distances and elevations and the emitters are evenly spaced along the tubing at 2-foot intervals. Small doses are applied into the soil through the emitters on a 24-hour cycle to provide effective treatment, disposal and management of the effluent. These "micro-doses" are typically just a few ounces of water per emitter during each pump cycle, resulting in a very low burden on the receiving soil.

The general effluent flow pattern is as follows: a pump sends the wastewater through a small filtering device called the Hydraulic Unit. The effluent is conveyed from the Hydraulic Unit to the drip dispersal field through a force main. Within the drip dispersal field, the effluent is supplied to one or more zones of tubing. Within a zone, the tubing is fed through a manifold to assure uniform distribution. Return piping from the drip dispersal field allows for occasional automatic flushing cycles to occur.

Copyright © 2015-2020 Oakson, Inc., Gloucester, Massachusetts

Figure 1: Typical One Zone System Component and Flow Diagram

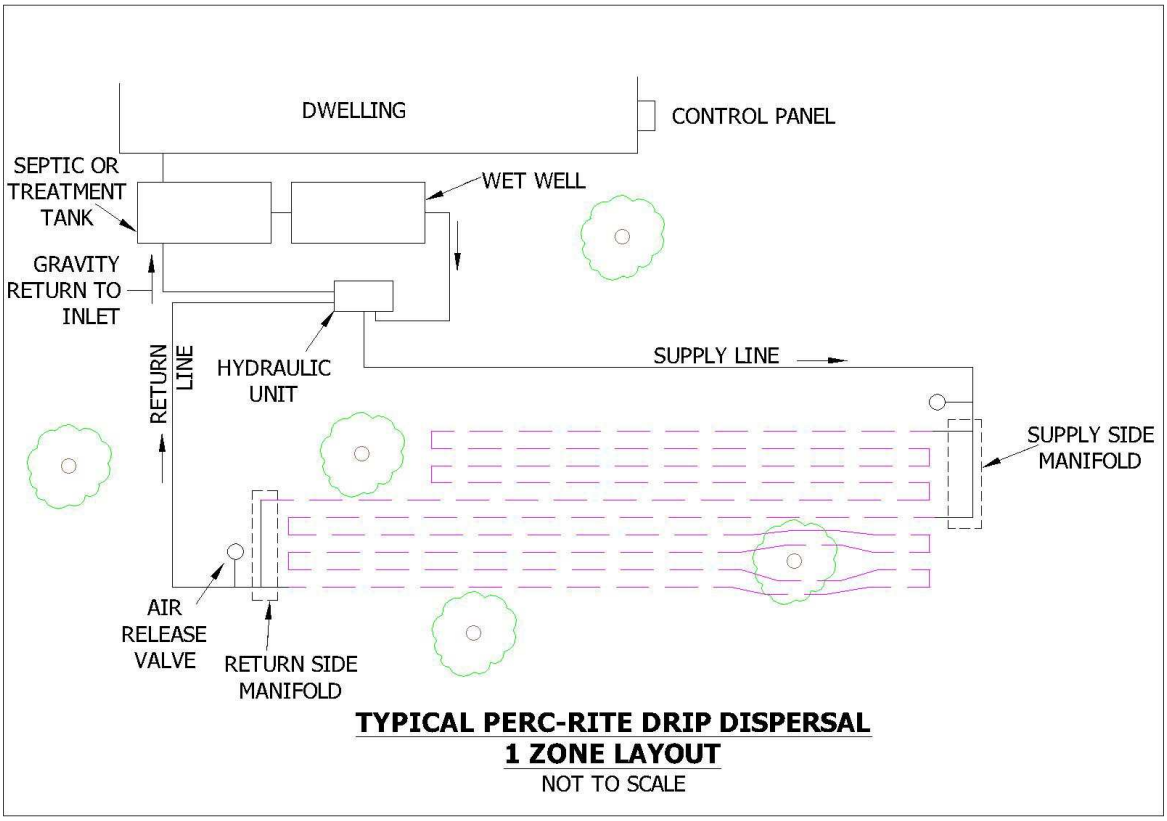

The example shows all the typical components of a one zone system. This schematic has ten runs of tubing that are fed by two laterals coming off a single supply pipe.

2. KEY SYSTEM COMPONENTS

- A key component of the Perc-Rite® Drip Dispersal System is the **Hydraulic Unit**. This device serves two purposes: final filtering to protect the drip tubing and, for multi-zone systems it allows feeding into different zones. There are two models of Hydraulic Units – the ASD model which is designed to accommodate septic tank effluent, and the WD model which is designed to accommodate filtrate effluent.

Copyright © 2015-2020 Oakson, Inc., Gloucester, Massachusetts

Within the ASD and WD Hydraulic Unit lines there are different models which can be used depending on the design flow for the project and the amount of drip tubing needed. The ASD-15 and WD-15 are used for flows up to about 2,000 GPD, the ASD-25 and WD-25 are usually used for flows between 2,000 to 6,000 GPD, and the ASD and WD models 40 through 250 are often for flows larger than 6,000 GPD. Oakson offers assistance with selection of the proper Hydraulic Unit.

A beneficial feature of all Hydraulic Units is the built-in totalizing and instantaneous flow meter. This diagnostic tool helps assure proper construction and long-term operation of the Perc-Rite® Drip Dispersal System.

- The **supply manifold** ensures even and instantaneous feeding of the drip tubing when the pump turns on. Effluent remaining in the manifold is drained into the soil upon shut-down.

  The supply manifold divides the tubing into clusters of drip dispersal tubing sections called **laterals.** A lateral will feed no more than 300' of tubing from the manifold.

  Once the manifold configuration is determined for the supply line which feeds the drip dispersal field, an identical manifold is selected for the return line. A return line collects the effluent and brings it back to the Hydraulic Unit during periodic automatic flushing of the drip tubing. This keeps the drip tubing in peak operating condition. To reduce site disturbance, the return line and return manifold are often placed immediately next to the supply line and supply manifold.

Copyright © 2015-2020 Oakson, Inc., Gloucester, Massachusetts

Figure 2: Drip Dispersal System Zone, Lateral and Run Depiction

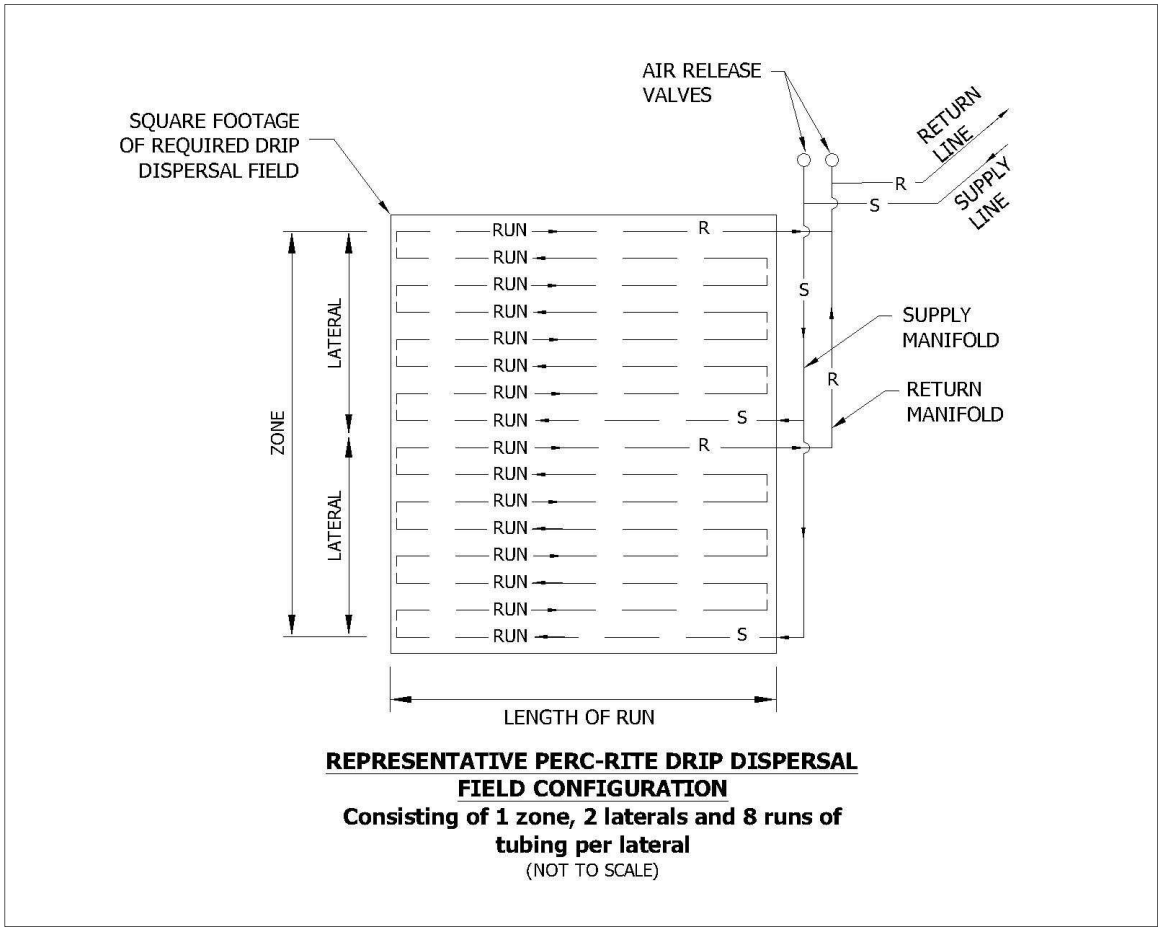

This view shows the labeling of the different parts of a Perc-Rite® Drip Dispersal zone.

- The supplied **pump** sits inside a standard wet well. The high head pump is energy efficient and can overcome many distance and elevation challenges with ease. The pump feeds the water through the Hydraulic Unit into a supply line and then into the supply manifold where it is divided into tubing runs that release effluent into the drip dispersal field. To assure rapid and even pressurization of the drip tubing two features are built into the system – air release valves and fully charged supply lines.

Copyright © 2015-2020 Oakson, Inc., Gloucester, Massachusetts

The air release valve sits inside a small irrigation box that is flush with the ground surface. This device automatically provides prompt pressurization of the drip tubing when the ball inside the valve closes, and provides prompt draining of the drip tubing into the soil once the pump shuts off. The air release valve sits at the high point of the manifold; one is provided on the supply side manifold, and one on the return side manifold. They are built on a gravel base and the provided irrigation box is insulated.

The supply line stays full for rapid pressurization and is built beneath the frost line. Vertical sections are insulated, since they pass through the frost zone.

- Another key component is the drip dispersal **tubing** itself which uses specialized emitters to assure equal distribution throughout, regardless of elevation or distance from the dosing tank or other parts of the drip dispersal field.

  The tubing stays clean through an automatic flushing regime which scours any slime or material that might grow inside the drip tubing and brings it back to the septic tank for settling. This flushing occurs about once per week when a valve inside the Hydraulic Unit is automatically opened in a pulsating manner to allow for flushing of the tubing to occur. The return line stays full at all times and is built beneath the frost line, typically in the same trench as the supply line.

- Lastly, a **control panel** with a simple timer-based logic programmer turns the pump on and off for a pre-selected amount of time throughout the 24-hour daily cycle, depending on the volume of water in the tank. The standard panel will emit an audible and visual signal in the event of an operational problem, while more robust communication options can be added as desired.

  The control panel also senses the water level in the pump tank and adjusts the dosing frequency to the drip dispersal field as needed to distribute the water into the soil over a 24 hour time period. A typical single family residence would have the pump turn on and feed

Copyright © 2015-2020 Oakson, Inc., Gloucester, Massachusetts

the drip tubing with a measured dose volume every 3 hours over the course of a full day. If for example due to excess use such as a party at the house this pump frequency was not sufficient to keep up with the water being introduced to the system, the floats would sense this and adjust the pump run frequency to be every 1.5 hours a day until it caught up with itself. This feature allows for great flexibility in managing short-term flow surges while still achieving the desired result of spreading the wastewater load into the drip dispersal field in small doses throughout the course of the day.

3. DESIGN

a. General Design Principles

- Either septic tank effluent or filtrate effluent can be discharged into the Perc-Rite® Drip Dispersal System. A standard septic tank or any approved filtrate system can be selected for settling and treatment prior to the Perc-Rite® Drip Dispersal System.

- Vertical separations to groundwater, ledge and impervious soils are the same as required for other types of wastewater dispersal systems, for either septic tank or filtrate effluent. Measurements to limitations are taken from the drip tubing.

- Drip dispersal tubing can be pulled into the existing ground surface or placed on a bed of sand and backfilled. This site-specific determination is based on the soil and groundwater conditions found at the site.

- On sloping sites the drip tubing can be placed following the contours, rather than in a level bed configuration. This more closely echoes the underlying water table usually found at a sloping site and can result in a disposal system that fits more naturally with the original site topography.

- Individual runs of drip tubing are generally level with themselves, but each run may be placed at varying elevations from the tubing run above

Copyright © 2015-2020 Oakson, Inc., Gloucester, Massachusetts

or below it. The pressure compensating emitters and the manifold will assure equal flow distribution throughout.

b. Specific Leachfield Design Requirements

- Designs using septic tank effluent follow the procedures in Vermont's Wastewater System and Potable Water Supply Rules except where they have been supplanted by the approval issued to use Perc-Rite® Drip Dispersal. Relevant excerpts from the approval are provided throughout this Design Guide. The designer may obtain a copy of the approval from Oakson's website.

- Designs using filtrate effluent follow the procedures in Vermont's Wastewater System and Potable Water Supply Rules, with particular attention to Sections 1-923 and 1-904.

- Perc-Rite® Drip Dispersal may be used as a distribution mechanism for all types of leachfields in the WW Rules: In-Ground, At-Grade and Mound Trenches and Beds as well as Bottomless Sand Filters.

- A Vermont-licensed Class 1, Class B or Class BW Licensed Designer can complete a design.

- A designer simply needs to calculate the area of a leachfield in accordance with the WW Rules Sections 1-917 through 1-922 and use that same footprint area for the drip dispersal field.

- Perc-Rite® Drip Dispersal is equivalent to pressure distribution wherever required in the WW Rules. For example, Section 1-904 requires pressure distribution with filtrate effluent and this system can be used in those instances. Another example can be found at Section 1-920 which requires pressure distribution for At-grade Leachfields, and this system can be used in those instances as well.

Copyright © 2015-2020 Oakson, Inc., Gloucester, Massachusetts

- Perc-Rite® Drip Dispersal uses timed-dosing of the effluent and complies with this requirement in the WW Rules wherever it is required as part of the design.

- A site-specific hydrogeologic evaluation is required where needed for any type of leachfield in WW Rules Section 1-903. Three common advantages of using a Perc-Rite® Drip Dispersal System include the easy compliance with linear loading rate layouts due to flexible design options, the micro-dosing which occurs at every emitter during each pump cycle, and the extensive evapotranspiration which can occur during some seasons. These features can be useful if seeking a waiver of the required hydrogeologic analysis.

- Setbacks from the drip dispersal tubing to trees can be reduced from 10' to 2'. Contact Oakson for assistance at locations where extensive trees are present as the footprint area of the drip dispersal field may need to be adjusted.

- No filter fabric is required above the drip tubing.

- No stone is needed beneath the tubing and there is only a 6" minimum bury depth. This provides a significant reduction in finished height compared to traditional disposal systems.

- When a Perc-Rite® Drip Dispersal is sized at 150% for the primary area, is used in a mound or in a bottomless sand filter there may be no need for a separate replacement area for new construction. This could allow for a less expensive solution and/or less land allocated for wastewater disposal.

- Variances may be requested for a project using any other type of leachfield.

Copyright © 2015-2020 Oakson, Inc., Gloucester, Massachusetts

c. Different Types of Disposal Systems in Vermont

Perc-Rite® Drip Dispersal can be used in any type of leachfield design indicated in the WW Rules:

- In-ground
- At-grade
- Mound
- Bottomless Sand Filter

Design parameters to be considered for all leachfield types include:

- The required area is calculated using the Application Rate found in Section 1-911, and is simply doubled for Filtrate effluent.

- Determine the minimum size of the Perc-Rite® Drip Dispersal leachfield using the Application Rate and the relevant type of leachfield in WW Rules Section 1-917 through 1-922.

- As a general design practice, it is recommended that the drip dispersal field and the drip tubing be designed parallel to the ground contours to the extent practical. This allows each run of drip tubing to be generally level.

- For in-ground systems, drip tubing is typically plowed into the soil to the design depth using a vibratory plow, or in very challenging sites the tubing may be dug in by hand. No additional soil cover or topsoil is typically required. The design bury depth of the drip tubing is measured from the finished surface grade.

- For drip dispersal systems built in a bed of constructed sand, installation of the drip dispersal tubing can occur in one of two ways: 1) place the tubing on the sand and backfill with 2” of sand and then cover material (this method is most common for a single-family house and other smaller mounds), or 2) backfill the mound with sand and soil and then pull the tubing into the finished grade using landscaping equipment (this method is most common for projects of several thousands of gallons per day). Either

Copyright © 2015-2020 Oakson, Inc., Gloucester, Massachusetts

construction method can be easily accommodated and does not change the design process.

- If the drip dispersal field is mounded, the installer should crown the entire mound with a cover of soil less permeable than the mound fill, the top 2” to 4” of this cover being topsoil.

- The drip dispersal field must be seeded or sodded to assure stability of the installation unless it is a Bottomless Sand Filter configuration. This grass cover is to be maintained and should be mowed minimally on an annual basis.

- No pressure testing of the drip tubing is necessary as the flow meter in the Hydraulic Unit will measure proper operating conditions.

Figure 3: Perc-Rite® Drip Dispersal System - 1 Zone Hydraulic Profile

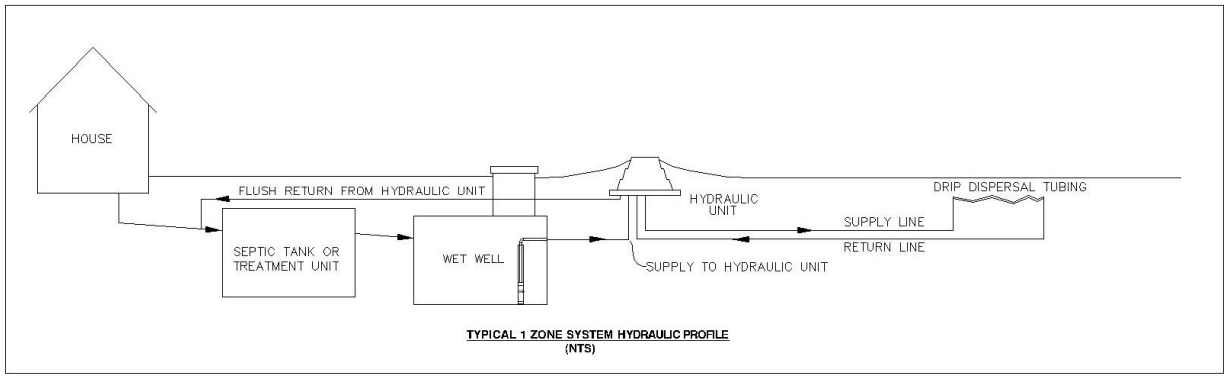

Copyright © 2015-2020 Oakson, Inc., Gloucester, Massachusetts

4. PERC-RITE® DRIP DISPERSAL DESIGN PROCEDURES

1. Calculate the Drip Dispersal Leachfield Size

Determine the Application Rate needed for the type of leachfield being used based on the WW Rules Section 1-911. The Application Rate can be doubled if using filtrate effluent. Determine the minimum size using the Application Rate and the relevant type of leachfield in WW Rules Section 1-917 through 1-922. After determining the minimum drip dispersal field size, additional square footage can be added to work around large boulders or numerous trees if they exist in the disposal area.

2. Determine Tubing Length & Spacing

Once the footprint area of the drip dispersal field has been determined and the length and width are calculated, one can simply use Oakson's website design tool to select the optimum tubing spacing within the drip dispersal field footprint area. Input the length and width needed and Oakson's tool calculates the total tubing length and the spacing between the runs of tubing. This can also be calculated manually. In general, the minimum number of feet of drip tubing required is the drip dispersal field area divided by two. For example, an 850 sq. ft. drip dispersal field would have about 425 linear feet of drip dispersal tubing. Staff at Oakson and Advanced Onsite Services are available to assist with this design aspect at no additional cost.

In the event that the amount of tubing calculated exceeds the minimum required, tubing runs are placed closer together within the same drip dispersal field area rather than expanding the area. For example if there is a 100' long drip dispersal field and it is determined that a minimum of 550' of drip tubing is needed, the calculator will round that number of tubing to 600' so there are 6 even lengths of tubing for efficient construction and even distribution. The area of the drip dispersal field will stay the same size, there will simply be slightly more tubing used. Note that there is no cost increase for lengths of tubing required by the Perc-Rite® Drip Dispersal System beyond the regulated minimum length in those instances.

To provide the correct pressure and flow rate, the tubing is divided into one or more **zones**. A one-zone system will have all the tubing fed at the same

Copyright © 2015-2020 Oakson, Inc., Gloucester, Massachusetts

time when the pump turns on while a two-zone system will alternate the feeding of zones. Most single family house projects use a one-zone configuration, while a small apartment building might have two-zones.

Figure 4: A two-zone system

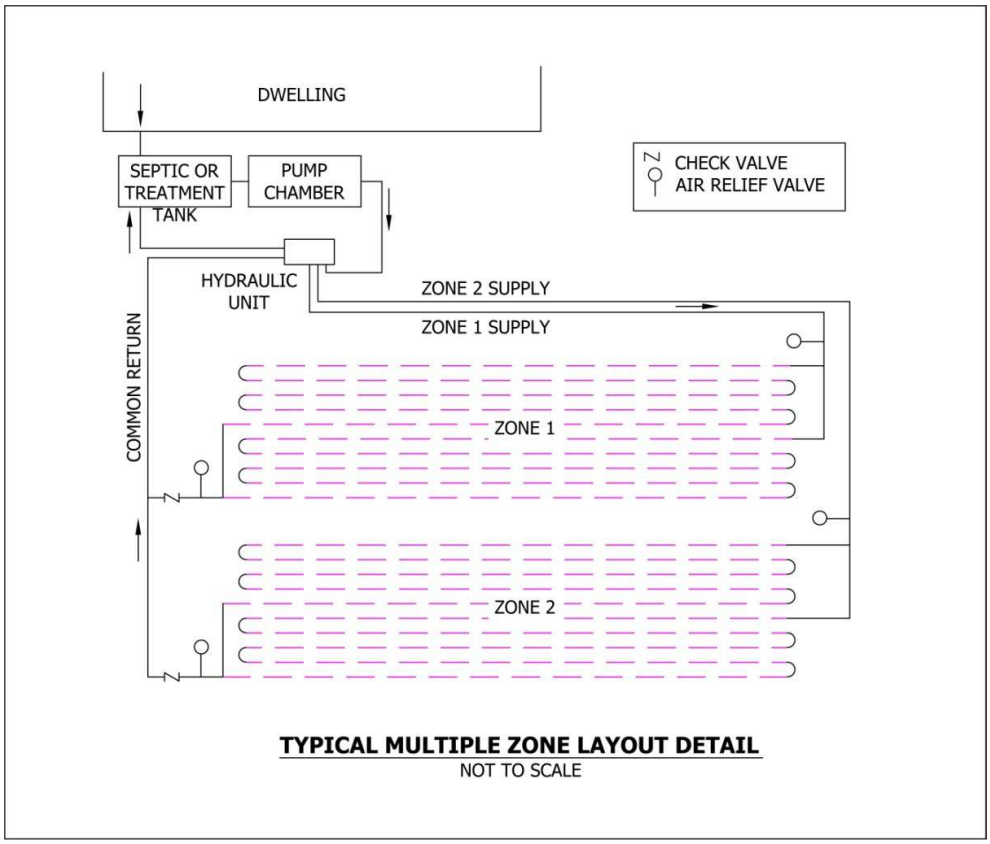

3. Select Manifold Arrangement

The designer needs to select the supply and return manifold position (same or opposite side of the drip dispersal field) and the manifold designations (the number of zones, laterals and runs of tubing). This is completed after the drip dispersal field length and width are known.

Oakson and Advanced Onsite Services wants to encourage designers to interact with us to best understand the tools available and the methodology used to select the manifold arrangement. The manifold selection can be output from Oakson's website design tool or calculated manually.

Copyright © 2015-2020 Oakson, Inc., Gloucester, Massachusetts

Drip dispersal systems with an even number of tubing runs will have the supply and return lines start and end on the same side of the drip dispersal field, allowing for both manifolds to be placed near each other. Where there is an odd number of tubing runs the manifolds will be on opposite ends of the drip dispersal field. Often, it can be advantageous to add one extra tubing run so that the manifolds can be placed on the same side for simplicity of construction.

Manifold are assembled at the site. For flat sites (slopes less than 3%) the manifolds used are slightly different than the manifolds used for sloping sites:

- On flat sites there is a force main located below the drip dispersal field with risers coming up to feed sections of drip tubing (laterals). This manifold configuration is called a **Side Feed manifold** (this is similar to a manifold used for a pressure distribution system).
- On sloping sites a force main comes up at one point located above the highest point in the drip dispersal field and then has feeders which supply to the sections of drip tubing (laterals). This manifold configuration is called a **Top Feed manifold**.

Copyright © 2015-2020 Oakson, Inc., Gloucester, Massachusetts

Figure 5: Top Feed supply and return manifolds serving a one-zone, two-lateral, four-run drip dispersal field

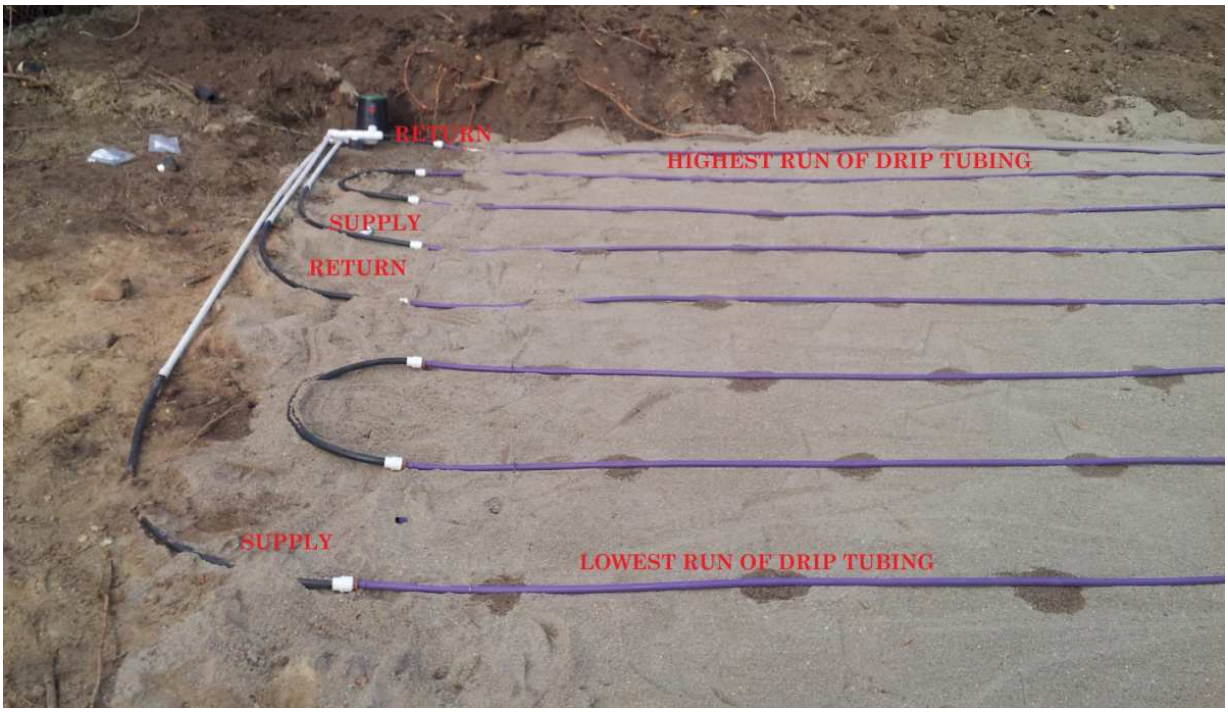

At this sloping site (the lowest run of drip tubing is at the bottom of the photo), there are two clusters of sections of purple drip tubing. The manifold splits into two supply lines, each feeding four interconnected runs of tubing with a return manifold located adjacent. This is a Top Feed manifold because the slope of the drip dispersal field from the highest to the lowest run of tubing is greater than 3%. The supply pipe from the pump chamber is located below the frost line (not shown in this photo) and has a 90^0 elbow to bring a riser up to a spot near the highest point.

Copyright © 2015-2020 Oakson, Inc., Gloucester, Massachusetts

Figure 6: Side Feed supply and return manifolds serving a one-zone, two-lateral, eight-run drip dispersal field

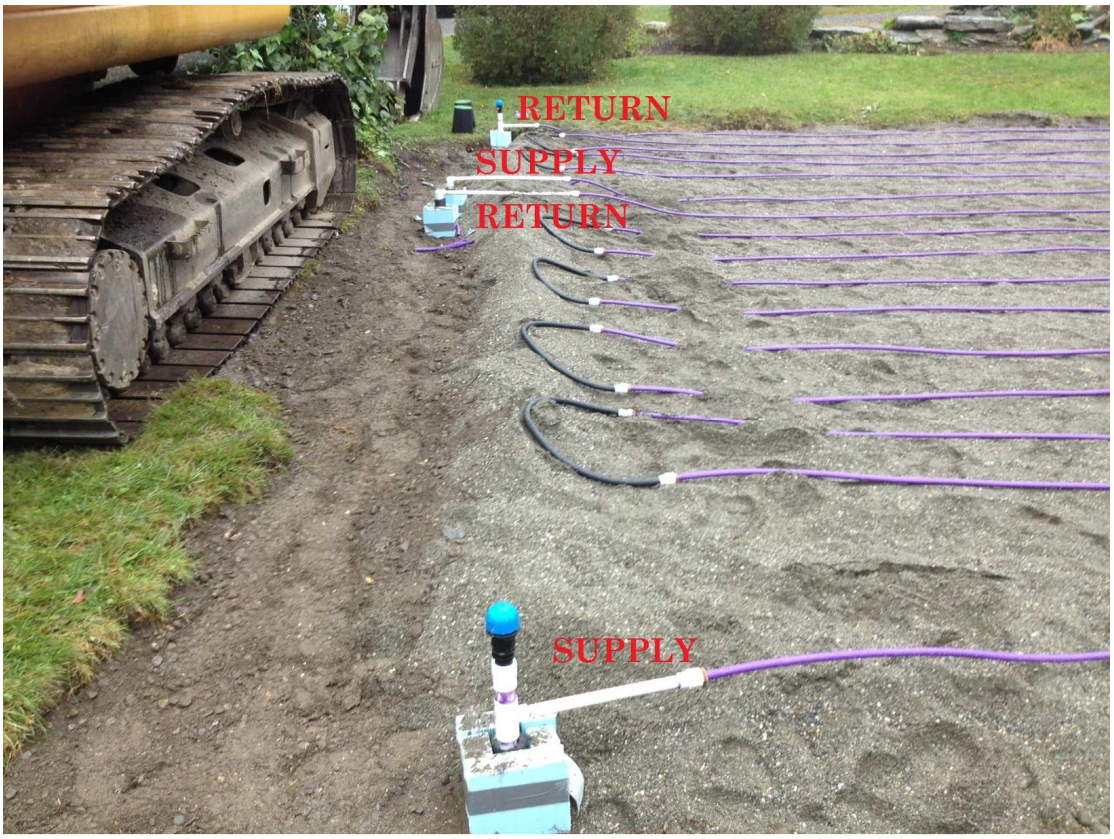

At this flat site using a Side Feed manifold, a force main pipe comes down from the Hydraulic Unit, parallels the ground surface in a location below frost depth, and then has risers coming up to feed the drip tubing. The return manifold can be placed in the same trench as the supply manifold because there is an even number of tubing runs.

CAD details for both side feed and top feed manifolds for the most common configurations are on the Engineering Support tab of Oakson's website. Use these, or assistance from Oakson or Advanced Onsite Services to select the proper manifold configuration and depict it on the design plan.

The same manifold configuration that is selected for the supply side of the drip dispersal field is applied to the return manifold.

Copyright © 2015-2020 Oakson, Inc., Gloucester, Massachusetts

Selecting the manifold is the part of the design most unique to using Perc-Rite® Drip Dispersal. Please contact Oakson or Advanced Onsite Services by phone or email for any needed assistance.

4. *If Needed, Repeat Steps Above for Multi-Zone Systems*

If the amount of drip tubing is more than 1,200 linear feet with a typical ASD-15 or WD-15 Hydraulic Unit, then a two zone system will be used to ensure proper operation. Typically two equal-sized zones are used, however drip dispersal affords great flexibility in this regard. If zones are different in size, simply repeat the steps above to determine the tubing amount, spacing and manifold needed for each zone.

5. *Select and Place Hydraulic Unit*

The Hydraulic Unit supplied with the Perc-Rite® Drip Dispersal System provides for final filtering to protect the drip tubing. Filtrate effluent uses the WD series of Hydraulic Units while septic tank effluent uses the ASD series. Systems with flows up to about 2,000 GPD will use the ASD-15 or the WD-15 Hydraulic Unit.

If you wish to specify the location of the Hydraulic Unit on the design plan, please note that the unit sits in the ground within an irrigation box with an access cover that is flush to the ground surface. For the ASD-15 and WD-15 systems, the Hydraulic Unit is typically placed on top of the septic tank or pump chamber. If site grading is not suitable for the 18” high irrigation box the Hydraulic Unit can simply be placed to the side. Larger Hydraulic Units are often in an above ground irrigation box or inside the treatment plant building.

The Hydraulic Unit must be placed to allow for a gravity return line to flow to the septic tank inlet.

Contact Oakson or Advanced Onsite Services for assistance selecting the correct Hydraulic Unit for larger projects.

Copyright © 2015-2020 Oakson, Inc., Gloucester, Massachusetts

6. *Note Piping Size*

You may wish to identify the pipes and their dimensions on the plan. The Hydraulic Unit and pump are plumbed for SCH 40 but suitable transition couplings can be used to allow SDR 26, HDPE or other allowable piping.

The pipe from the pump to the Hydraulic Unit will be 1.5” diameter. The return pipe which flows from the Hydraulic Unit to the septic tank inlet by gravity is also 1.5”.

The pipe (or pipes, if it is a multi-zone drip dispersal system) leaving the Hydraulic Unit to the drip dispersal supply manifold will be 1” diameter. The return line (from the drip dispersal field return manifold to the Hydraulic Unit) will also be 1” diameter.

7. *Confirm Adequacy of Standard Pump*

The high-head pump that is provided with the Perc-Rite® Drip Dispersal System will suit most configurations and properly feed the drip tubing. There is no need to perform head loss calculations, they have been already factored into the component design and selection.

For the ASD-15 and WD-15, the components are known to function as intended when the Hydraulic Unit is located within 30’ horizontally and 10’ vertically of the pump. This is often achieved by having the Hydraulic Unit placed on top of the septic tank or pump chamber.

When pumping uphill and the drip dispersal field is located within 100’ of the Hydraulic Unit, almost any head differential can easily be met. Situations with greater distances or head are easy to custom design with assistance from Oakson or Advanced Onsite Services. When pumping downhill, a pressure reducer is provided when needed to assure the tubing is not over-pressurized during operation.

Since the system components have been pre-engineered with the appropriate pump, calculations or pump curves are not necessary to be completed. Dual alternating pumps can easily be configured if required.

Copyright © 2015-2020 Oakson, Inc., Gloucester, Massachusetts

8. Determine Float Settings

There are four floats which will be located inside the pump chamber/wet well and the designer will need to specify the distances between them to assure proper operation of the timer-based dosing system. A description of the floats follows:

- The bottom '**Off float'** prevents pump burnout if the water level drops in the tank.
- The second float up, the '**Drip Enable float**,' engages the timer to go into the normal operating mode.
- If triggered, the third float up, the '**Peak Enable float**,' engages the timer to go into a more frequent pump operating mode to overcome surges of water.
- The highest float, the '**Alarm float**,' signals an audible and visual alarm on the control panel in the event of a malfunction.

The lowest two floats are factory set at 16" and 20" off the tank bottom. The position of the other floats is usually provided by the designer. To determine these float heights, first determine the height of the alarm float by simply calculating one day's worth of design flow in inches, add 20", and set the alarm float at that height. Once the height of the alarm float is established, the third float (the peak enable float) is then set at half the distance between the drip enable float and the alarm float.

For example, a three bedroom house would have a design flow of 420 GPD. If the wet well has 1,500 gallon capacity we might have 30.4 gallons per inch of storage in the tank, so a full day's flow might be 420/30.4 = 14". Knowing the drip enable float is at 20" off the tank bottom, we would set the alarm float at 20" + 14" = 34" off the tank bottom, and the peak enable float at half that distance 20" + 7" = 27" off the tank bottom. Of course the design flow and the dimensions of the pump tank/wet well will determine the float settings, so they need to be calculated for each site and tank.

Capacity in the wet well is needed for the required emergency storage above the alarm float. This is not needed if a generator is provided, or an approved filtrate system is used which contains flow equalization and suitable emergency storage. Systems greater than 2,000 gallons per day have dual alternating pumps.

Copyright © 2015-2020 Oakson, Inc., Gloucester, Massachusetts

Figure 7: Wet well float positions

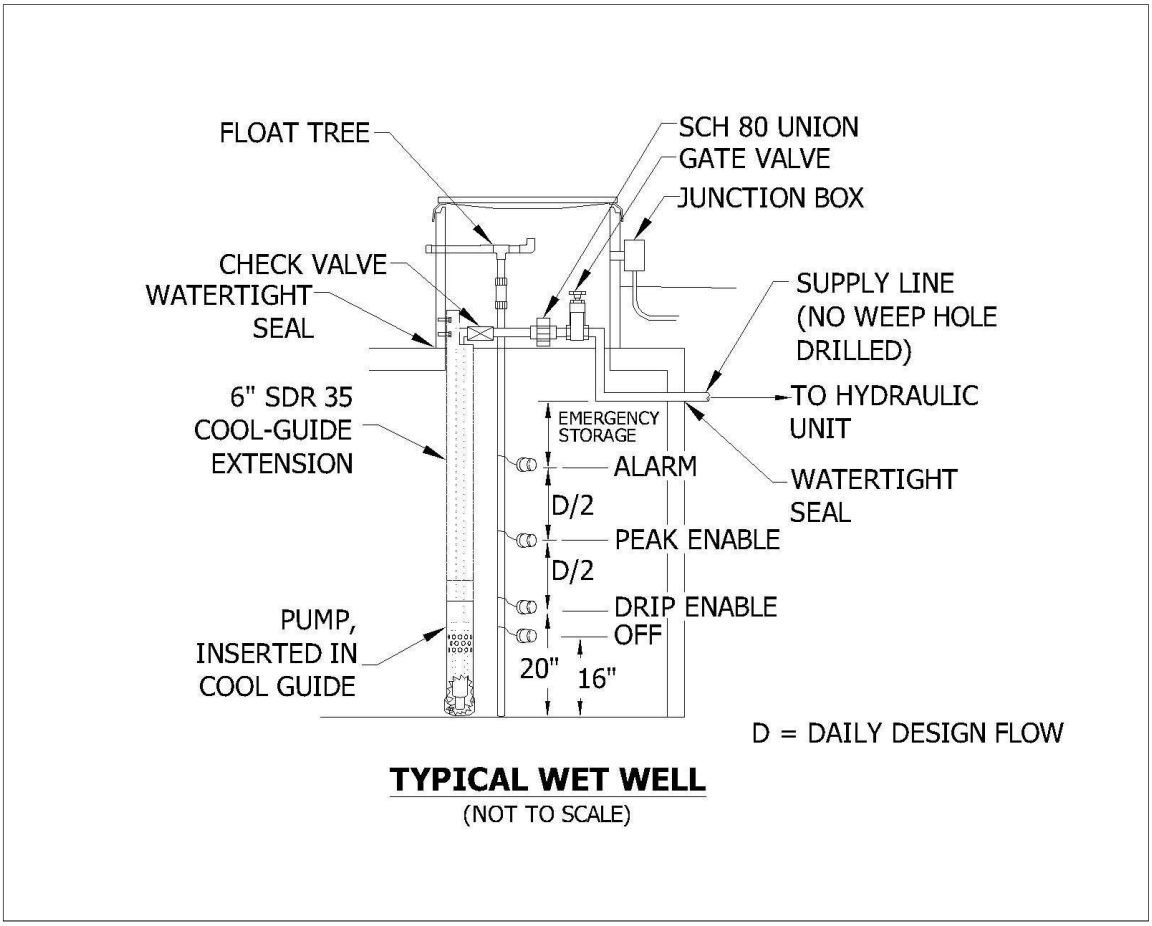

9. Depict Method of Tubing Installation

Depending on the soil conditions and the water table at the site, the tubing will either be plowed into the existing ground or placed on or in a bed of sand fill. Like all sand fill, it must meet the specifications in the WW regulations. Typical profiles showing a plowed in or a sand bed tubing placement are provided on Oakson's website should be put on the design plan. Perc-Rite® Drip Dispersal requires only 6"-12" bury depth.

Copyright © 2015-2020 Oakson, Inc., Gloucester, Massachusetts

Figure 8: Profile of Perc-Rite® Drip Dispersal Leachfield - In-ground or At-Grade Configuration

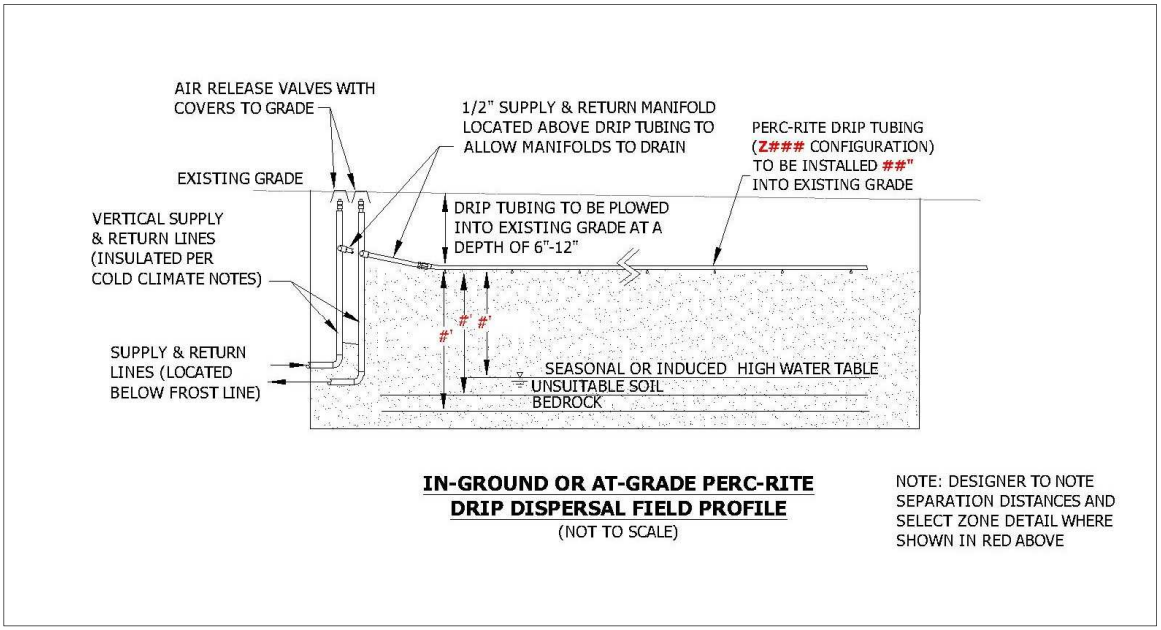

Figure 9: Profile of Perc-Rite® Drip Dispersal Leachfield – Mound or Bottomless Sand Filter Configuration

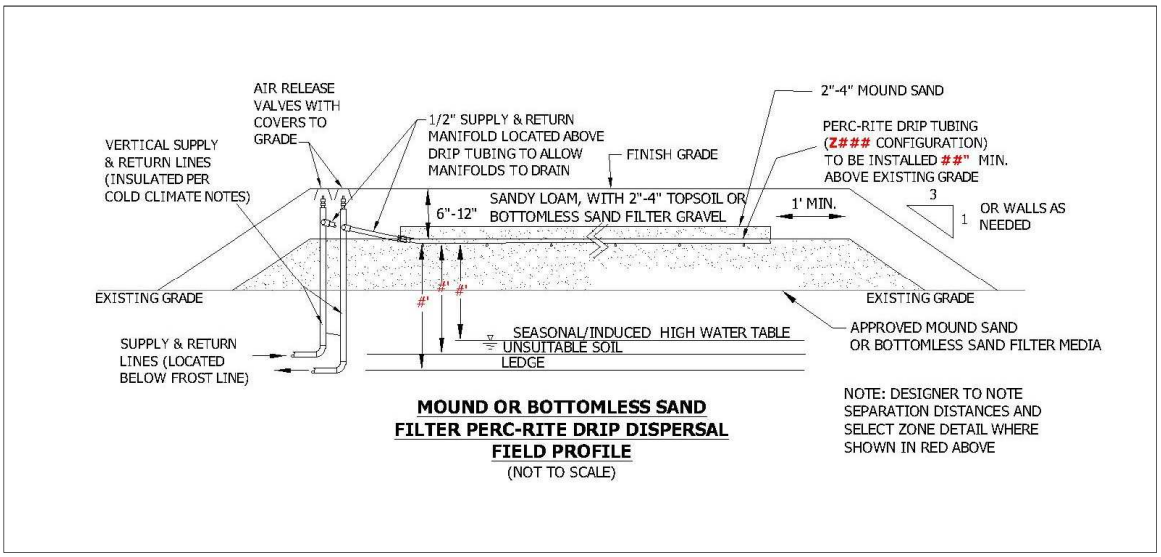

10. Depict Final Grading

If changes to the site grading are needed due to a mound, proposed grading should be depicted. If the drip dispersal field is built on a sand bed, it is typical to have the sand fill follow the existing contours (as the water table

Copyright © 2015-2020 Oakson, Inc., Gloucester, Massachusetts

typically does the same) which helps reduce the volume of sand and the associated visual impact.

11. General Information to Consider

Oakson or Advanced Onsite Services Design Review

Oakson and Advanced Onsite Services is happy to provide designers with feedback on plans prior to submission. When requested, Oakson or Advanced Onsite Services will provide a letter of concurrence with the design plan which can be used for submission to regulatory agencies as needed.

Soils

Acceptable soil conditions to place the drip dispersal system can include the topsoil horizon as long as it is naturally occurring and pervious. If the designer desires to retain the topsoil layer it must be correctly classified during the soil evaluation.

Designing a standard drip dispersal field underneath a parking area requires careful attention such as additional venting because of possible inadequate oxygen transfer into the soil. Contact Oakson for special design assistance if such a configuration is necessary.

Cold Weather Design

Basic aspects of typical cold weather installation procedures include a temperature-sensitive heater strip located inside the Hydraulic Unit enclosure, locating the supply line below frost, placing insulation on feeder pipes where they traverse the frost zone, and draining of the manifold pipes into the drip tubing and allowing the drip tubing to empty into the soil after each pump cycle.

All installations in New England are designed and built with Perc-Rite® Drip Dispersal's cold weather procedures. Information with details and notes about these procedures is part of the standard detail sheet available on Oakson's website and should be included on the design plan.

Copyright © 2015-2020 Oakson, Inc., Gloucester, Massachusetts

Seasonal Facilities

For facilities with only seasonal or intermittent occupancy, the basic design remains the same. If it is anticipated that power will be turned off at the facility then the Hydraulic Unit will be constructed with couplings to allow easy removal and drainage for the winter and re-installation in the spring. If power is retained to the facility then the Hydraulic Unit can simply be left in place with no special modifications required. For larger flow changes such as summer campgrounds with a year-round caretaker, all but one zone can be turned off for winter usage.

Construction

Like prudent construction practice for any type of disposal area, equipment not needed to build the drip dispersal field should be kept off the disposal area to prevent undesirable compaction of the soil. Installation of the drip tubing is not to occur when the soil moisture content is high. To test, see if soil from about 9" below the surface can easily be rolled into a wire. If so, the soil moisture content is likely too high for construction to occur.

Construction Inspection

Upon completing construction of the drip dispersal field, the flow rate is measured using the flow meter in the Hydraulic Unit. This result is then compared to the intended flow rate to assure that construction of the components occurred correctly. No pressure testing is needed within the drip dispersal field to confirm proper construction.

The force main piping may be visually observed to be watertight by operating the system during its clear water start-up, or it may be backfilled and pressure tested as would be done for any other pump configuration.

A licensed designer must direct the testing of the Perc-Rite® Drip Dispersal System to assure proper functionality pursuant to Section 1-923.

Maintenance and Reporting

Like all innovative/alternative systems allowed in Vermont, there are requirements for annual routine preventative maintenance by trained personnel. Contact Oakson or Advanced Onsite Services for information on certified service providers in your area.

Copyright © 2015-2020 Oakson, Inc., Gloucester, Massachusetts

5. CONCLUSION

This Guide is intended to assist in the design process for a Perc-Rite® Drip Dispersal System. If you require additional assistance or just want someone to walk you through each step, an Oakson or Advanced Onsite Services staff member will gladly help at no additional cost.

Oakson and Advanced Onsite Services are committed to your project success. We want to review design plans before they are submitted, assist with laying out a drip dispersal field, provide CAD details, or otherwise assist designers, contractors, owners and regulators in Vermont achieve successful installations of Perc-Rite® Drip Dispersal Systems.

Oakson

978-282-1322

or

info@oakson.com

Advanced Onsite Services

802-891-6949

or

admin@aoservices.biz

Oakson, Inc. is an authorized user of the Perc-Rite® trade name and related materials for drip dispersal systems. Perc-Rite® is a registered trade name of American Manufacturing Company, Inc., Elkwood, VA

Copyright © 2015-2020 Oakson, Inc., Gloucester, Massachusetts

6. DESIGNER CHECKLIST

Drip dispersal field area calculated per WW regulations
Tubing spacing calculated and shown
Manifold selected and detail provided
Hydraulic Unit model selected and location shown
Return line from Hydraulic Unit to septic tank inlet shown
Pipe sizes labeled
Float height and emergency storage calculations completed and shown on plan
In-ground or above-ground detail provided, fill and cover specifications provided
If desired, system flow profile, construction notes and other standard details from Oakson website added to plan
Operation and maintenance documents prepared (by authorized O&M service provider)

Copyright © 2015-2020 Oakson, Inc., Gloucester, Massachusetts

7. PERC-RITE® DRIP DISPERSAL – APPROVED VERMONT VENDORS

Oakson
6 Sargent Street
Gloucester, MA 01930
978-282-1322
info@oakson.com
www.oakson.com

Advanced Onsite Services
PO Box 124
Milton, VT 05468
802-891-6949
admin@aoservices.biz
www.aoservices.biz

Copyright © 2015-2020 Oakson, Inc., Gloucester, Massachusetts