INFILTRATOR
water technologies

Vermont

Design and Installation Manual for Infiltrator Chambers in Vermont

The purpose of this manual is to provide design and installation information for the use of Infiltrator Water Technologies Quick4® chambers in Vermont. Exceptions and changes may be made, but should be in conformance with applicable codes. The use of Infiltrator chambers according to this manual is authorized by the Vermont Agency of Natural Resources Department of Environmental Conservation by Innovative/Alternative System Approval 2006-4-R5 and subsequent revisions, in accordance with the Wastewater System and Potable Water Supply Rules, April 12, 2019, or as amended. The manual provides a brief description of Quick4 chambers, sizing specifications and installation requirements. Each revised version of this manual supersedes the previous version.

For more detailed design information, please contact Infiltrator Water Technologies at 1-800-221-4436

Infiltrator Chambers in Vermont

PRODUCTS	2
SYSTEM SIZING	7
CHAMBER DETAILS	10
INSTALLATION INSTRUCTIONS	15
WARRANTY	22

Vermont

INTRODUCTION

Quick4 Chambers

The Quick4 Plus High Capacity, Quick 4 High Capacity, Quick4 Plus Standard, Quick4 Standard and Quick4 Plus Standard Low Profile (LP) chambers fit into a 36-inch-wide trench. The Quick4 Plus Standard LP chamber has a 4 inch lower vertical profile than the standard chamber models, allowing for shallower installation. The Quick4 Plus chambers offer advanced contouring capability and superior strength through a system of center structural columns. The Quick4 Plus line of endcaps is available with these chambers, providing increased flexibility in systemsconfigurations. All chambers can be installed in a bed. Ask your local Infiltrator sales representative for more information.

Quick4 Standard Nominal Chamber Dimensions

Size:	34”W x 48”L x 12”H
Storage Capacity:	44 gal
Invert Elevation:	8”

QUICK4 STANDARD

Quick4 High Capacity Nominal Chamber Dimensions

Size:	34”W x 48”L x 16”H
Storage Capacity:	62 gal
Invert Elevation:	11.5”

QUICK4 HIGH CAPACITY

Quick4 Equalizer 36 Chamber Nominal Specifications

Size (W x L x H)	22" x 53" x 12"
Invert Elevation	6"
Storage	32 gal.

QUICK4 EQUALIZER 36

Quick4 Plus Standard Nominal Chamber Dimensions

Size:	34”W x 48”L x 12”H
Storage Capacity:	45 gal
Invert Elevation:	5.3”, 8”

QUICK4 PLUS STANDARD

Quick4 Plus Standard Low Profile (LP) Nominal Chamber Dimensions

Size:	34”W x 48”L x 8”H
Storage Capacity:	32 gal
Invert Elevation:	3.3”, 8”

QUICK4 PLUS STANDARD LOW PROFILE (LP)

Quick4 Plus Equalizer 36 Low Profile Chamber Nominal Specifications

Size (W x L x H)	22" x 53" x 8"
Invert Elevation	6"
Storage	20.8 gal.

QUICK4 PLUS EQUALIZER 36 LOW PROFILE

Quick4 Standard Chamber

SIDE AND END VIEWS (not to scale)

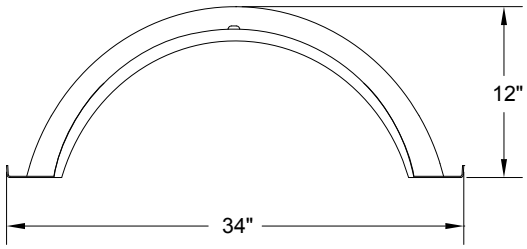

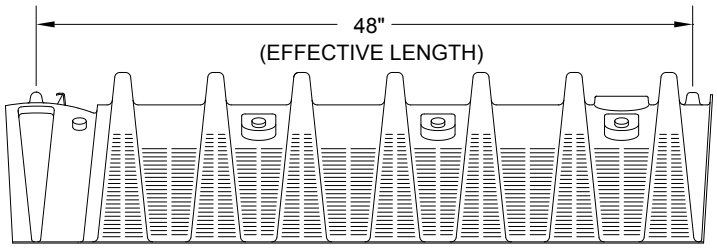

Quick4 Standard MultiPort Endcap

SIDE AND END VIEWS (not to scale)

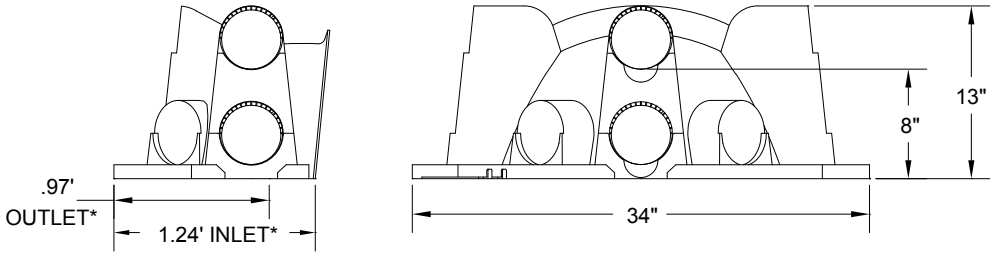

**Effective Length When Connected*

Quick4 High Capacity Chamber

SIDE AND END VIEWS (not to scale)

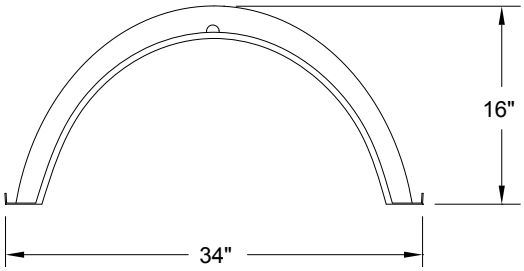

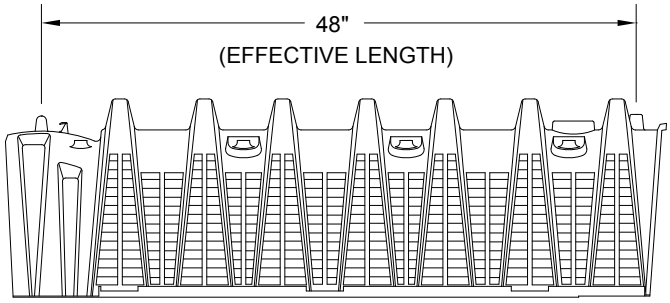

Quick4 High Capacity MultiPort Endcap

SIDE AND END VIEWS (not to scale)

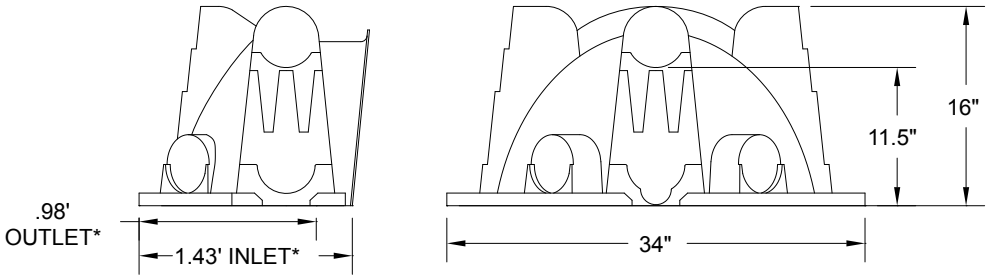

Quick4 Equalizer 36 Chamber

SIDE AND END VIEWS (not to scale)

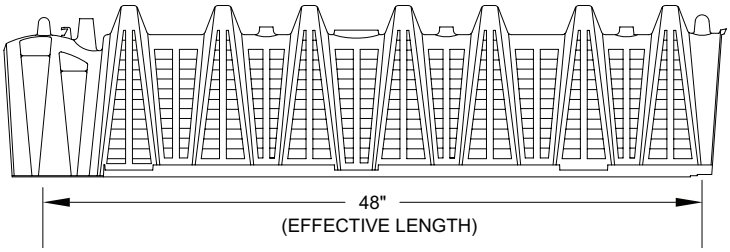

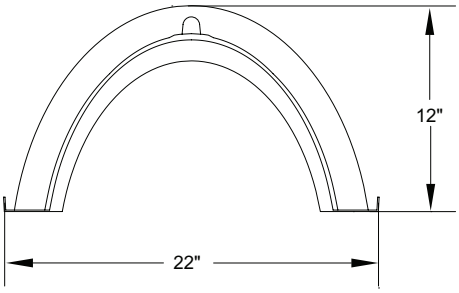

Quick4 Equalizer 36 MultiPort Endcap

SIDE AND END VIEWS (not to scale)

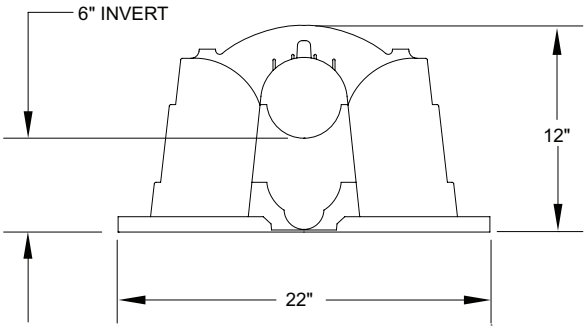

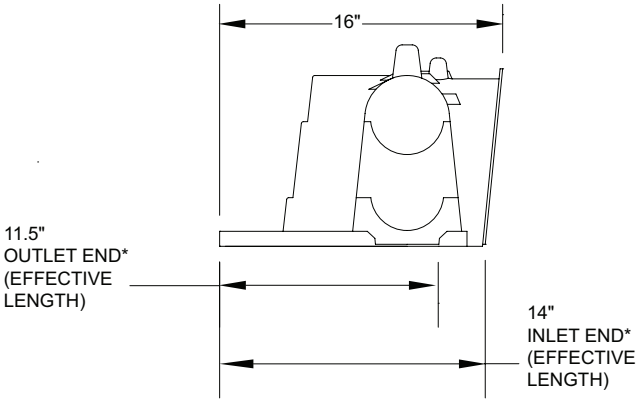

Quick4 Plus Standard Chamber

SIDE AND END VIEWS (not to scale)

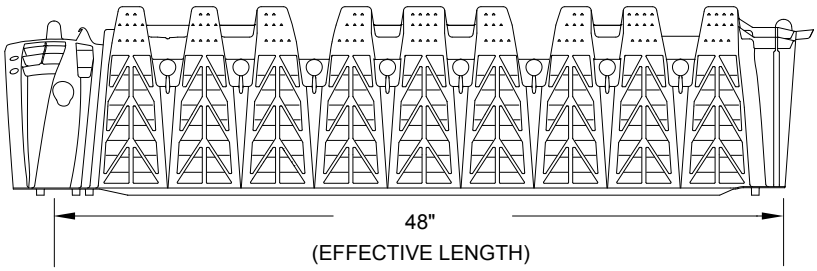

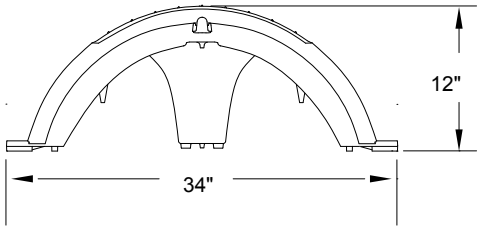

NOTES:

1. The Quick4 Plus Standard Chamber is compatible with the Quick4 Plus All-in-One 12 Endcap.
2. Optional monitoring ports can be installed in the Quick4 Plus All-in-One Encap.

Quick4 Plus Standard LP Chamber

SIDE AND END VIEWS (not to scale)

Reduced Vertical Profile
The Quick4 Plus Standard LP chamber provides a lower vertical profile This feature provides two distinct benefits:

- **Promotion of aerobic treatment**
  The reduced vertical profile moves infiltration closer to the ground surface, thereby improving the potential for subsoil aeration from the atmosphere. This promotes oxygen recharge to the biologically active vadose zone beneath the infiltrative surface and helps support aerobic decomposition of wastewater.
- **Increased vertical separation**
  For a site with a shallow groundwater table, impervious conditions, or other restrictions that limit vertical separation distance, the reduced height of the LP chamber increases separation distance.

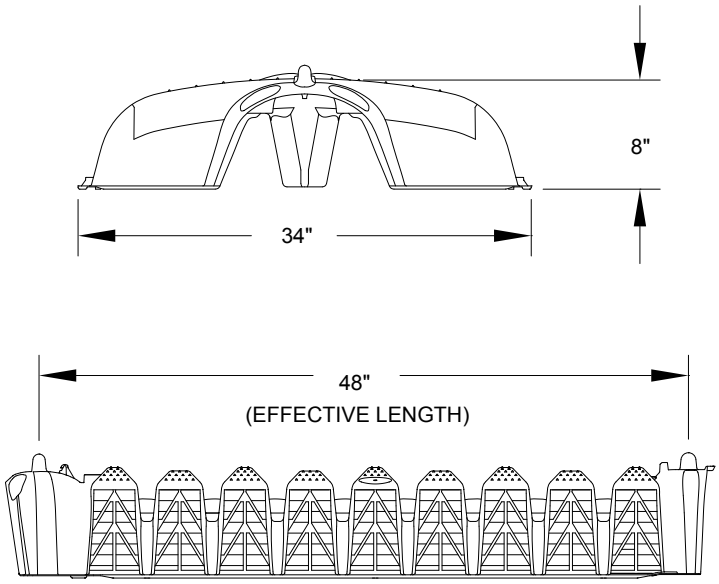

NOTE: The Quick4 Plus Standard LP Chamber is compatible with the Quick4 Plus Endcap and Quick4 Plus All-in-One 8 Encap.

Quick4 Plus Equalizer 36 Low Profile Chamber

SIDE AND END VIEWS (not to scale)

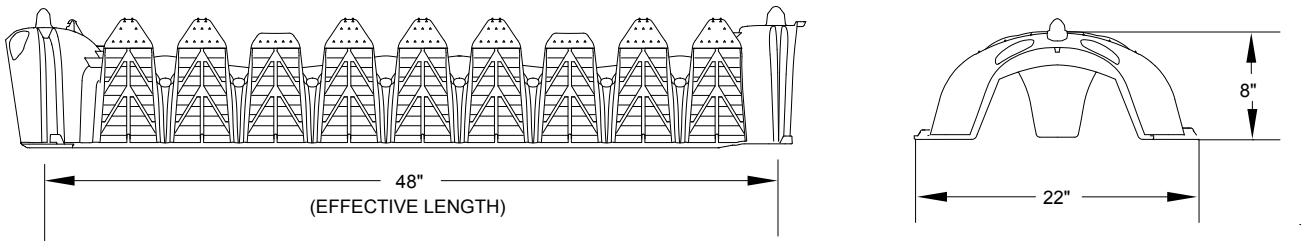

NOTE: The Quick4 Plus Equalizer 36 Low Profile Chamber is compatible with the Quick4 Plus Endcap and Quick4 Plus All-in-One 8 Encap.

Quick4 Plus Endcap

SIDE AND END VIEWS (not to scale)

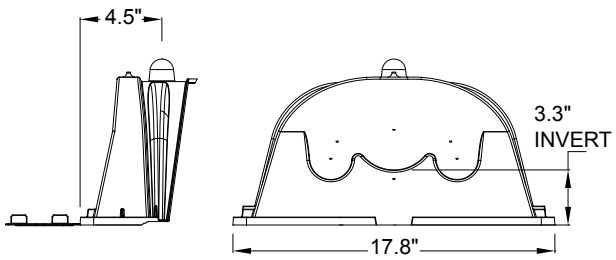

Quick4 Plus All-in-One 8 Endcap

SIDE AND END VIEWS (not to scale)

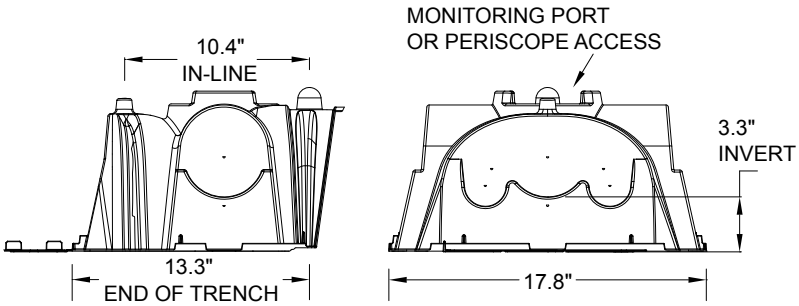

NOTE: The All-in-One 8 Endcap can be installed in-line with chambers on either side. This allows the system to be inletted at any location along the trench.

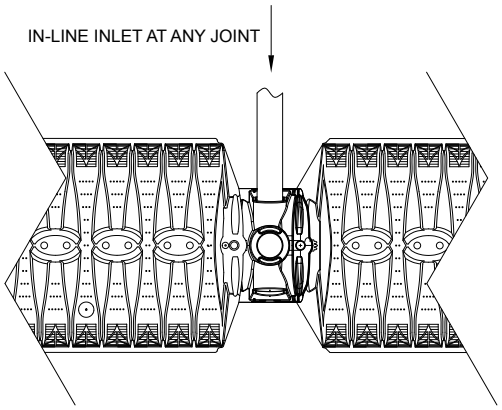

IM-Series Septic Tanks

The IM-Series Septic Tanks are durable and watertight. The injection-molded plastic tanks offers exceptional strength in a two-piece design efficient for shipping and local assembly. The IM-Series Septic Tanks enable a wide variety of installation options including single, multiple and serial tank configurations. No special backfill, installation or waterfilling procedures are required. Tanks can be pumped dry during pump-outs and can be installed with 6” to 48” of cover. Contact Infiltrator for specific information on IM-Tanks, CAD drawings and details are available.

Infiltrator IM-Series Tanks			
Tank	**IM-540**	**IM-1060**	**IM-1530**
Applications	Suitable for use as a pump tank, trash-tank, rainwater (non-potable) tank, or as the second compartment of an in-series septic tank.	Suitable for use as a pump tank, septic tank or rainwater tank, shallow, multiple, and serial tank configurations.	Suitable for use as a pump tank, septic tank or rainwater tank, shallow, multiple, and serial tank configurations.
Working Capacity	475 gal (1799 L)	1094 gal (4141 L)	1537 gal (5818 L)
Total Capacity	552 gal (2089 L)	1287 gal (4872 L)	1787 gal (6765 L)

Quick4 and Quick4 Plus Chamber and EndCap Ratings

Infiltrator Chambers can be designed and installed in trench or bed systems. The following TABLES 1–4 should be used for reference only. The actual amount of chambers may vary based on design criteria.

TABLE 1. CHAMBER RATINGS

CHAMBER MODEL	Dimensions W x L[1] x H Inches	Effective Width Inches[2]	TRENCH		BED
			Trench Width Inches	Effective Leaching Area[3] SF/LF	Effective Leaching[4] Area SF/LF
Quick4 Plus Standard Low Profile	34 x 48 x 8	27.24	36	4.54	3.62
Quick4 Standard, Quick4 Plus Standard	34 x 48 x 12	27.24	36	4.54	3.62
Quick4 High Capacity	34 x 48 x 16	29.16	36	4.86	3.89
Quick4 Plus Equalizer 36 Low Profile	22 x 48 x 8	19.32	24	3.22	2.57
Quick4 Plus Equalizer 36 Low Profile (2 chambers per trench)	(2) 22 x 48 x 8	38.64	48	6.43	Quick4 Plus Standard Low Profile, Quick4 Standard, and Quick4 High Capacity are better suited for bed application
Quick4 Equalizer 36	22 x 48 x 12	19.32	24	3.22	
Quick4 Equalizer 36 (2 chambers per trench)	(2) 22 x 48 x 12	38.64	48	6.43	

TABLE 2. ENDCAP RATINGS (per pair)

CHAMBER MODEL	Model of Corresponding Endcap	TRENCH	BED
		Effective Leaching Area per Pair of Endcaps SF/Pair	Effective Leaching Area per Pair of Endcaps SF/Pair
Quick4 Plus Standard Low Profile	Quick4 Plus Endcap	2.24	1.79
	Quick4 Plus All-in-One 8 Endcap	6.6	5.28
Quick4 Standard	Quick4 Standard Multiport Endcap	7.1	5.68
Quick4 High Capacity	Quick4 High Capacity Multiport Endcap	8.9	7.12
Quick4 Plus Equalizer 36 Low Profile	Quick4 Plus Endcap	2.24	Quick4 Plus Standard Low Profile, Quick4 Standard, and Quick4 High Capacity are better suited for bed applications
	Quick4 Plus All-in-One 8 Endcap	6.6	
Quick4 Equalizer 36	Quick4 EQ36 Multiport Endcap	4.6	

NOTES:

1. Chamber length is effective installed length.
2. Effective width is based upon inside open bottom area.
3. Effective leaching area is calculated based upon effective width and twice the application of rate of conventional pipe and stone systems.
4. The allowable application rate for an in-ground bed system is 80% of that for an in-ground trench system.
5. For crediting purposes the length of the Quick4 chamber row including the endcaps shall be utilized. Two endcaps are required for each row of chambers. The minimum number of chambers shown may be reduced by accounting for the sizing provided by the endcaps.
6. The following chambers and others are also approved for use. Contact Infiltrator Water Technologies for information.
   - Quick4 Equalizer 24
   - Quick4 Equalizer 24LP
   - High Capacity H-20 Chamber for Traffic Applications.

7. This approval is based on disposal only of domestic wastewater of low and moderate strengths as specified in § 1-805 of the Rules. Systems to treat higher strength wastes may be approved by the Secretary on a case-by-case basis with the Vendor's agreement . Please call Infiltrator Water Technologies for system assistance.

For information and sizing, please contact Infiltrator Water Technologies at 1-800 221-4436

Quick4 and Quick4 Plus Chambers in Trench Systems

TABLE 3.
TRENCH SIZING for: Quick4 Plus Standard Low Profile (Q4+STDLP), Quick4 Standard (Q4STD), Quick4 High Capacity (Q4HC), Quick4 Plus High Capacity (Q4+HC), Quick4 Plus Equalizer 36 Low Profile (Q4+EQ36LP), Quick4 Equalizer 36 (Q4EQ36)

Soil Characteristics		Minimum Number of Chambers Required (see TABLE 2 for rating benefit of endcaps)							
		3 Bedrooms 420 GPD (Double Occupancy)				Each Additional Bedroom 70 GPD (Single Occupancy)			
		2' Wide Trench	3' Wide Trench		4' Wide Trench	2' Wide Trench	3' Wide Trench		4' Wide Trench
Texture	Structure type	Q4+EQ36LP & Q4EQ36	Q4+STDLP, Q4STD, & Q4 HC	Q4+HC	Q4+EQ36LP & Q4EQ36	Q4+EQ36LP & Q4EQ36	Q4+STDLP, Q4STD & Q4 HC	Q4+HC	Q4+EQ36LP & Q4EQ36
Very Coarse Sand or Coarser	SG	N/A (See 1-919(b))							
Coarse Sand, Sand	SG	33	25	20	33	4	3	3	4
Loamy Coarse Sand, LoamySand	SG	33	25	20	33	4	3	3	4
Fine Sand, Very FineSand, Loamy Fine Sand, Loamy Very Fine Sand	SG	33	25	22	33	6	4	4	6
	MA/PL	66	47	44	66	11	8	8	12
	PR/ABK/SBK/GR	47	34	31	47	8	6	6	8
Coarse Sandy Loam, Sandy Loam	MA/PL	66	47	44	66	11	8	8	12
	PR/ABK/SBK/GR	47	34	31	47	8	6	6	8
Fine Sandy Loam, Very Fine Sandy Loam	MA/PL	66	47	44	66	11	8	8	12
	PR/ABK/SBK/GR	55	39	37	55	10	7	7	10
Loam	MA/PL	66	47	44	66	11	8	8	12
	PR/ABK/SBK/GR	55	39	37	55	10	7	7	10
Silt Loam, Silt	MA/PL	109	78	73	109	19	13	13	20
	PR/ABK/SBK/GR	82	58	55	82	14	10	10	14
Sandy Clay Loam, Clay Loam, Silty Clay Loam	MA/PL	131	93	87	131	22	16	15	22
	PR/ABK/SBK/GR	109	78	73	109	19	13	13	20
Sandy Clay, Clay, Silty Clay		N/A (See 1-919(b))							

NOTES:

1. The design flow for a single family residence on its own individual lot shall be based on a minimum of 3 bedrooms.
2. In 4' wide trenches Q4+EQ36LP and Q4EQ36 chambers can be installed 2 wide (side by side). The 4' trench length will be 1/2 the length of the Q4+EQ36LP and Q4EQ36 chambers installed in a 2' trench.
3. For crediting purposes the length of the Quick4 and Quick4+ chamber row including the end caps shall be utilized. Two endcaps are required for each row of chambers. The minimum number of chambers shown may be reduced by accounting for the sizing provided by the end caps, see TABLE 2.
4. Each additional bedroom may be assumed to have one person per bedroom. When a building will be subjected to rental use or when it is likely there will be extended or frequent high occupancy use, or when double occupancy requested by the user, the system should be sized for at least 2 persons per bedroom.
5. The designer may size the system with TABLE 1 chamber ratings; however, IWT recommends the following minimum sizing:
   Q4 EQ36 - 33 chambers
   Q4 STD - 25 chambers
   Q4 HC - 20 chambers

Quick4 and Quick4 Plus Chambers in Bed Systems and At Grade Leachfields

TABLE 4.
BED SIZING FOR: Quick4 Plus Standard Low Profile (4+STDLP), Quick4 Standard (Q4STD), Quick4 High Capacity (Q4HC)

Soil Characteristics		Minimum Number of Chambers Required (see TABLE 2 for rating benefit of endcaps)	
		3 Bedrooms 420 GPD (Double Occupancy)	Each Additional Bedroom 70 GPD per Bedroom (Single Occupancy)
Texture	Structure type	Q4+STDLP, Q4STD & Q4HC	Q4+STDLP, Q4STD & Q4HC
Very Coarse Sand or Coarser	SG	N/A (See 1-919(b))	
Coarse Sand, Sand	SG	25	4
Loamy Coarse Sand, Loamy Sand	SG	25	4
Fine Sand, Very FineSand, Loamy Fine Sand, Loamy Very Fine Sand	SG	29	5
	MA/PL	58	10
	PR/ABK/SBK/GR	39	7
Coarse Sandy Loam, Sandy Loam	MA/PL	58	10
	PR/ABK/SBK/GR	39	7
Fine Sandy Loam, Very Fine Sandy Loam	MA/PL	58	10
	PR/ABK/SBK/GR	47	8
Loam	MA/PL	58	10
	PR/ABK/SBK/GR	47	8
Silt Loam, Silt	MA/PL	116	20
	PR/ABK/SBK/GR	78	13
Sandy Clay Loam, Clay Loam, Silty Clay Loam	MA/PL	116	20
	PR/ABK/SBK/GR	116	20
Sandy Clay, Clay, Silty Clay		N/A (See 1-919(b))	

NOTES:

1. The design flow for a single family residence on its own individual lot shall be based on a minimum of 3 bedrooms.
2. For crediting purposes the length of the Quick4 and Quick4+ chamber row including the end caps shall be utilized. Two end caps are required for each row of chambers. The minimum number of chambers shown may be reduced by accounting for the sizing provided by the end caps, see TABLE 2.
3. Each additional bedroom may be assumed to have one person per bedroom. When a building will be subjected to rental use or when it is likely there will be extended or frequent high occupancy use, or when double occupancy requested by the user, the system should be sized for at least 2 persons per bedroom.
4. The designer may size the system with TABLE 1 chamber ratings; however, IWT recommends the following minimum sizing:
   Q4 STD - 25 chambers
   Q4 HC - 20 chambers
5. Additional approved Infiltrator chambers maybe used in bed detail. The models listed in TABLES 4 and 5 are most suitable.

Quick4 and Quick4 Plus Chambers in Mound Systems

TABLE 5: MOUND SIZING for: Quick4 Plus Standard Low Profile (Q4+STDLP), Quick4 Standard (Q4STD), Quick4 High Capacity (Q4HC)		
Mound Systems	**MINIMUM NUMBER OF CHAMBERS REQUIRED (see TABLE 2 for rating benefit of endcaps)**	
	3 Bedrooms 420 GPD Design Flow (Double Occupancy)	**Each Additional Bedroom 70 GPD per Bedroom (Single Occupancy)**
	Q4+STDLP, Q4STD & Q4HC	**Q4+STDLP, Q4STD & Q4HC**
	25	4

1. The design flow for a single family residence on its own individual lot shall be based on a minimum of 3 bedrooms.
2. For crediting purposes the length of the Quick4 and Quick4+ chamber row including the end caps shall be utilized. Two end caps are required for each row of chambers. The minimum number of chambers shown may be reduced by accounting for the sizing provided by the end caps, see TABLE 2.
3. Each additional bedroom may be assumed to have one person per bedroom. When a building will be subjected to rental use or when it is likely there will be extended or frequent high occupancy use, or when double occupancy requested by the user, the system should be sized for at least 2 persons per bedroom.
4. The designer may size the system with TABLE 1 chamber ratings; however, IWT recommends the following minimum sizing:
   Q4 STD - 25 chambers
   Q4 HC - 20 chambers
5. Additional approved Infiltrator chambers maybe used in bed detail. The models listed in TABLES 4 and 5 are most suitable.

Quick4 Standard Mound Details

TYPICAL CROSS SECTION (not to scale)

NOTE: Mound Systems can be designed for slopes up to 20%.

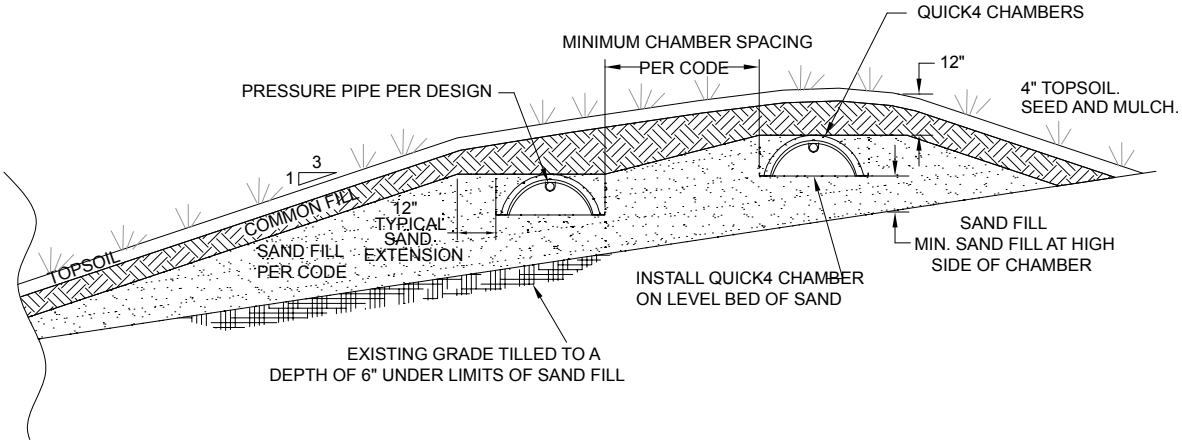

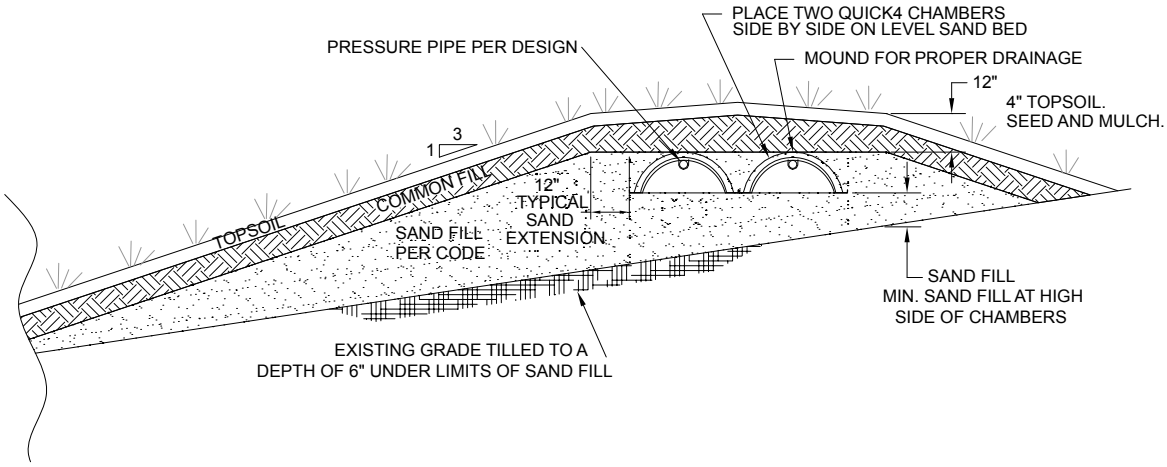

Quick4 Standard Trench Detail

TYPICAL CROSS SECTION (not to scale)

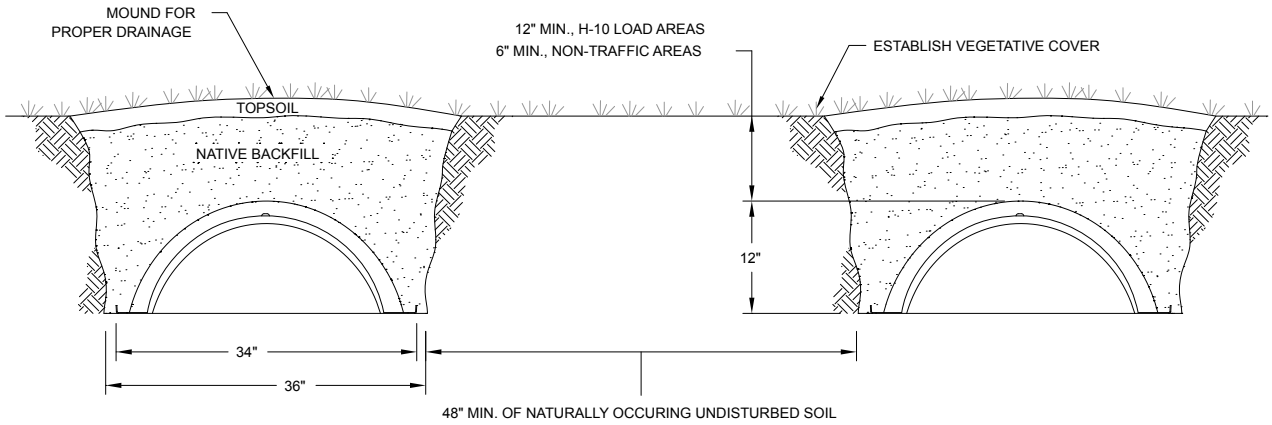

Quick4 High Capacity Trench Detail

TYPICAL CROSS SECTION (not to scale)

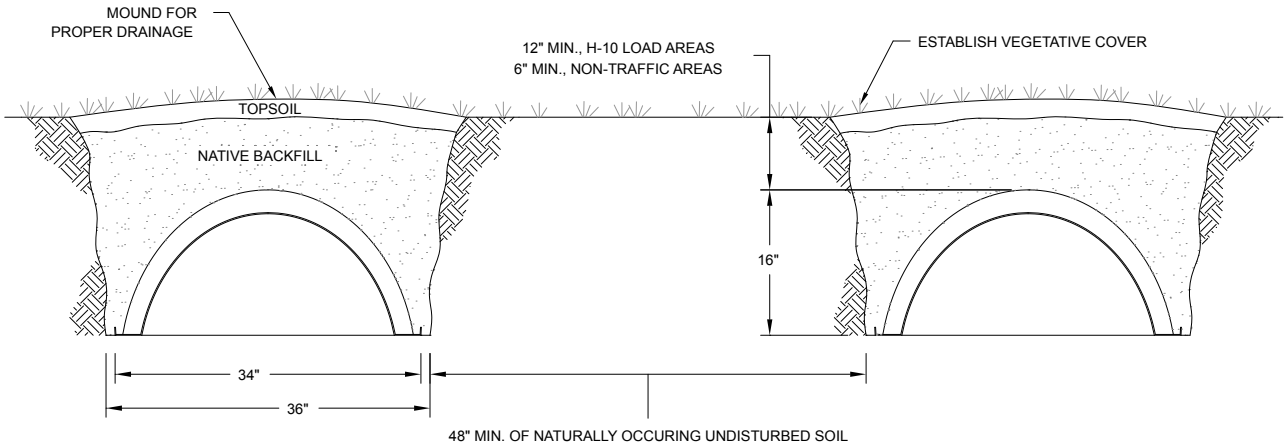

Quick4 Equalizer 36 Trench Detail

TYPICAL CROSS SECTION (not to scale)

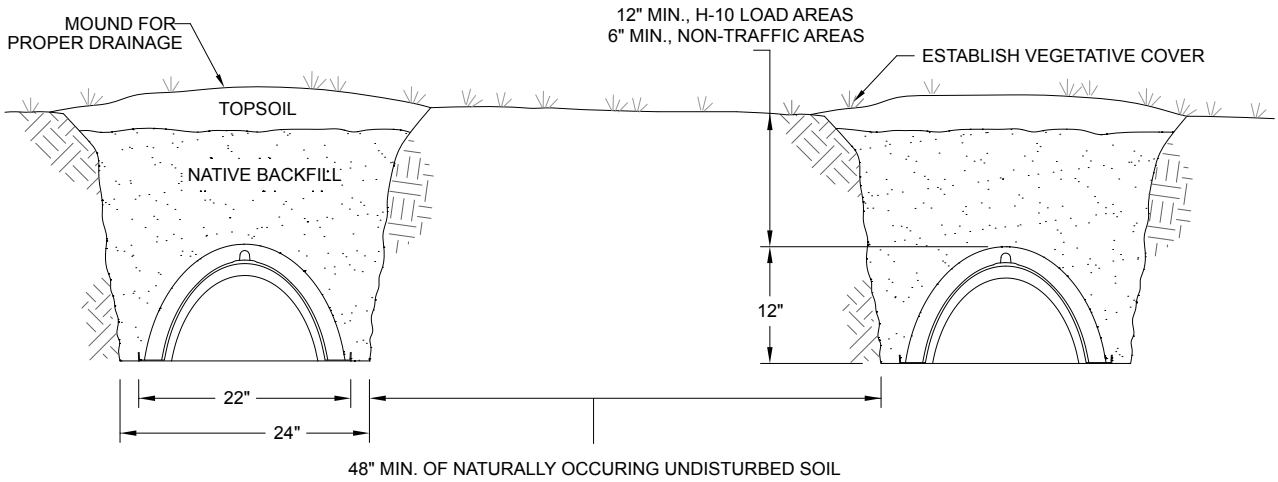

Quick4 Plus Standard Trench Detail

TYPICAL CROSS SECTION (not to scale)

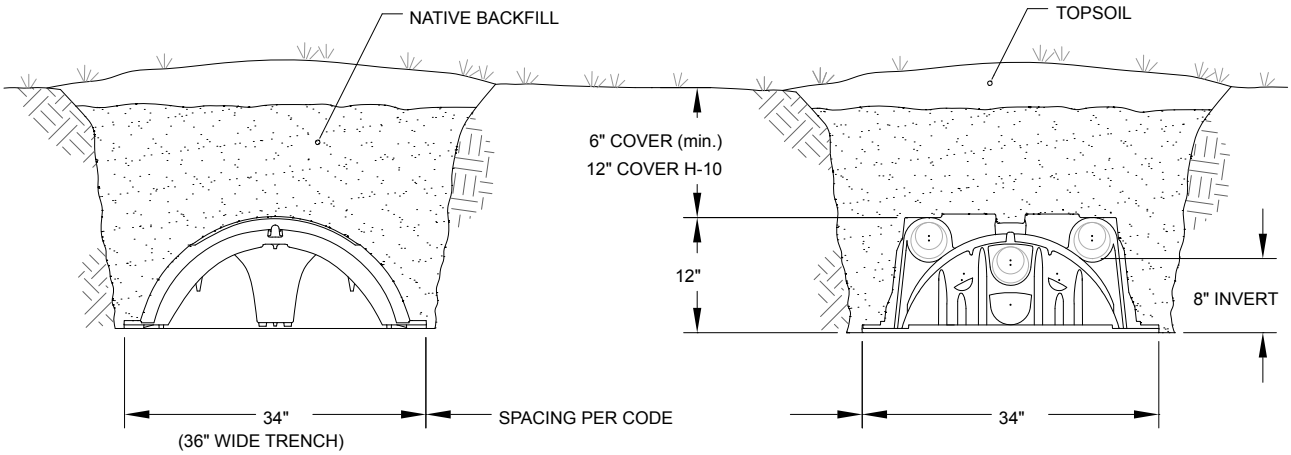

Quick4 Plus Standard Low Profile Trench Detail

TYPICAL CROSS SECTION (not to scale)

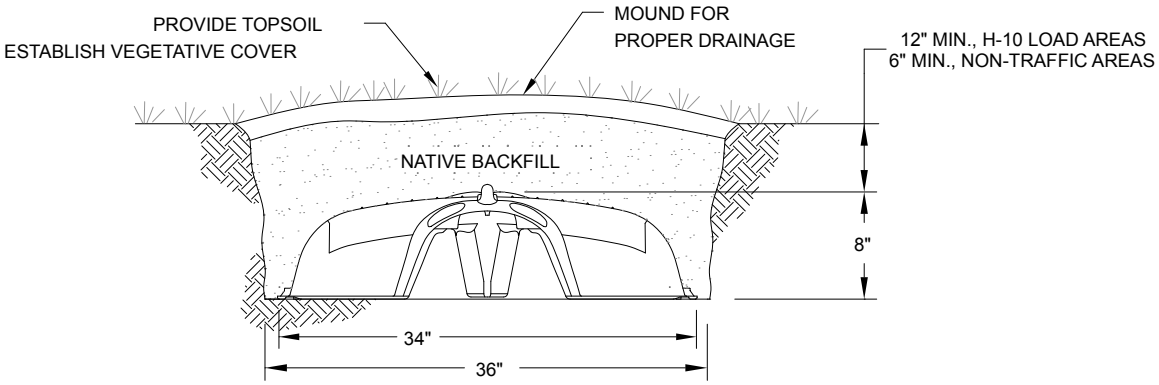

Quick4 Plus Equalizer 36 Low Profile Trench Detail

TYPICAL CROSS SECTION (not to scale)

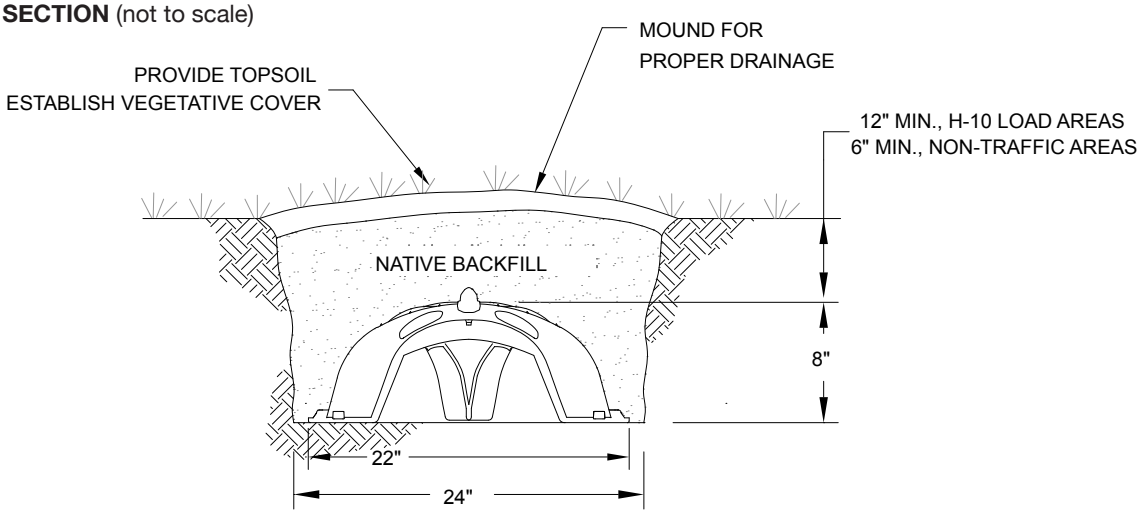

Quick4 or Quick4 Plus Standard Standard Chamber Bed Detail

TYPICAL CROSS SECTION
(not to scale)

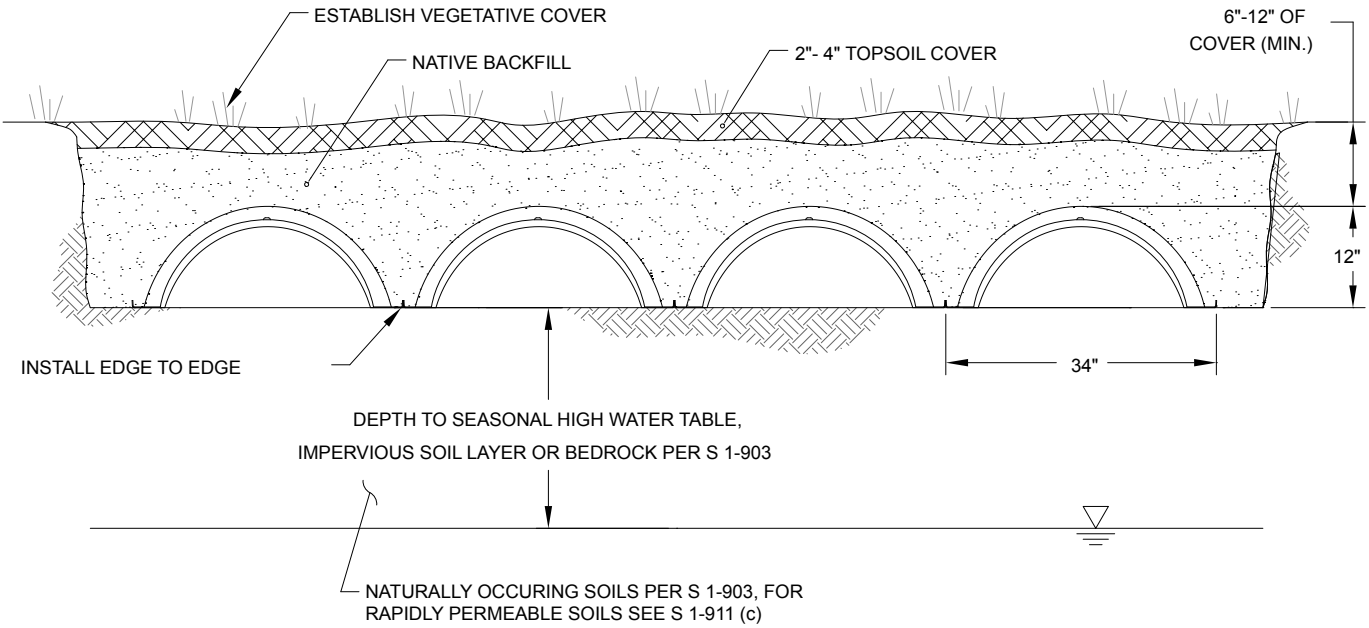

Note: Other Infiltrator chambers may be installed in this configuration in gravity or pressurized systems.

TYPICAL PLAN VIEW
(not to scale)

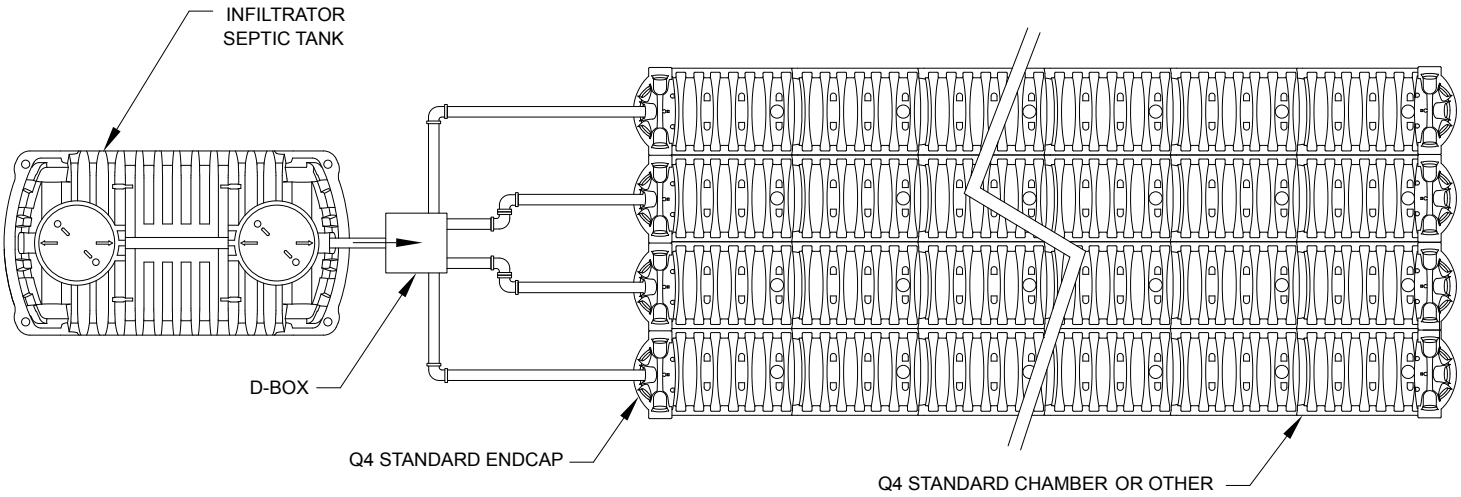

Quick4 Plus Standard Low Profile Chamber Bed Detail

TYPICAL CROSS SECTION (not to scale)

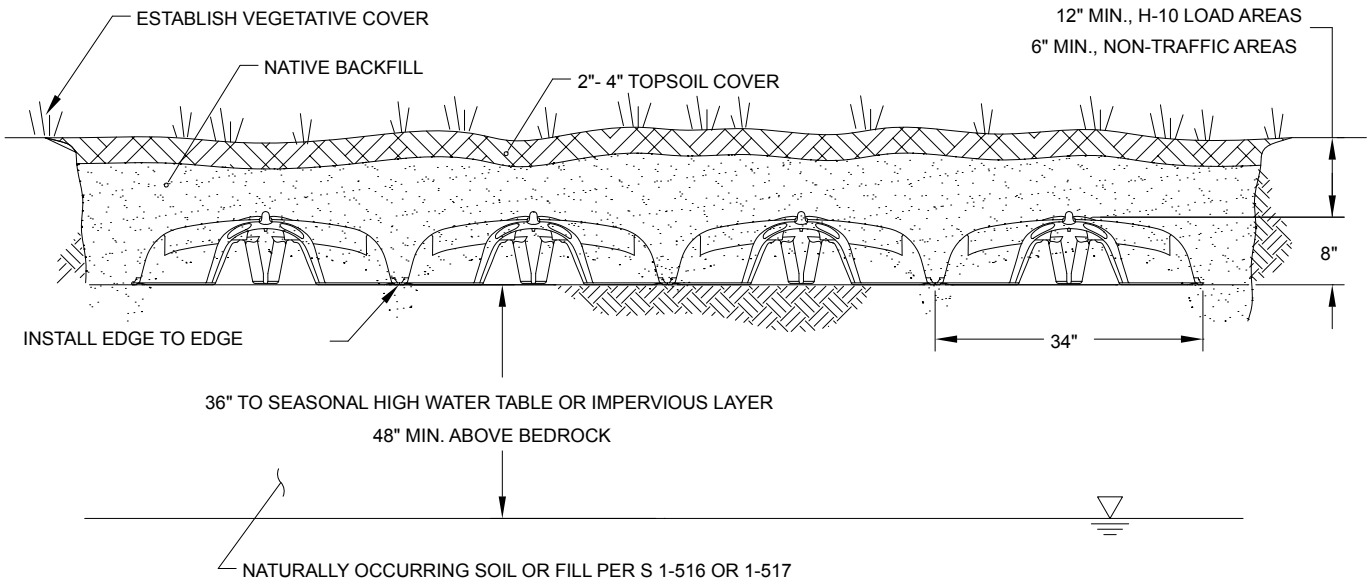

Note: Other Infiltrator chambers may be installed in this configuration in gravity or pressurized systems.

Quick4 Trench Systems

This section provides septic installation instructions for trench system designs in Vermont. Quick4 chambers may only be installed according to state and/or local regulations. If unsure of the installation requirements for a site, contact your state or local regulator.

Like conventional systems, the soil and site conditions must be approved for installation. Conduct a thorough site evaluation to determine the proper size and location of the system before installation.

Before You Begin

Materials and Equipment Needed

- ☐ Quick4 Chambers
- ☐ Multiport Endcaps
- ☐ PVC Pipe and Couplings
- ☐ Laser / Transit / 4-foot Level
- ☐ Backhoe
- ☐ Shovel and rake
- ☐ Screw Gun*
- ☐ Screwdriver or Utility knife
- ☐ Hole Saw*
- ☐ 2-inch Drywall Screws*
- ☐ Small Valve-Cover Box*
- ☐ 2-inch Drywall Screws*
- ☐ 4-inch Cap for Inspection Port*

*Optional

These guidelines for construction machinery must be followed during installation.

- ☐ Avoid direct contact with chambers when using construction machinery. Maintain a minimum of 12 inches of compacted cover over the chambers. Chambers with this minimum covering can support AASHTO H-10 loads of 16,000 lb/axle.
- ☐ For shallow cover applications chambers can be installed with a 6-inch minimum of compacted cover to support a wheel load rating of 4,500 lbs/axle.
- ☐ Only drive across the trenches when necessary. Never drive down the length of them.
- ☐ To avoid additional soil compaction, never drive heavy vehicles over the completed system.

Excavating and Preparing the Site

NOTE: As is the case with conventional systems, do not install the system in wet conditions or in overly moist soils, as this causes machinery to smear the soil.

1. Stake out the location of all trenches and lines. Set the elevations of the tank, pipe, and trench bottom.

2. Install sedimentation and erosion control measures. Temporary drainage swales/berms may be installed to protect the site during rainfall events.

3. Excavate and level 3-foot wide trenches with proper center-to-center separation. Verify that the trenches are level or have the prescribed slope.

NOTE: Over excavate the trench width in areas where you are planning to contour.

4. Rake the bottom and sides if smearing has occurred while excavating. Remove any large stones and other debris. Do not use the bucket teeth to rake the trench bottom.

NOTE: Raking to eliminate smearing is not necessary in sandy soils. In fine textured soils (silts and clays), avoid walking in the trench to prevent compaction and loss of soil structure.

5. Verify that each trench is level using a level, transit or laser.

Preparing the Endcap

1. With a screwdriver or utility knife start the tear-out seal at the appropriate diameter for the inlet pipe. The seal allows for a tight fit for 3-inch, 4-inch SDR35, and 4-inch SCH40 pipe.

2. Pull the tab on the tear-out seal to create an opening on the endcap.

3. Snap off the molded splash plate located on the bottom front of the endcap.

4. Install splash plate into the appropriate slots below the inlet to prevent trench bottom erosion.

NOTE: In pump or pressure dosed systems install the High Flow Splash Plate for Quick4 Standard chambers.

5. Insert the inlet pipe into the endcap at the beginning of the trench.

1. Start tear-out seal.

2. Pull tab on tear-out seal.

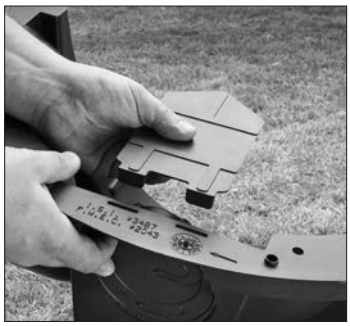

4. Install splash plate.

5. Insert inlet pipe.

Installing the System

1. Check the inlet pipe to be sure it is level or has the prescribed slope.

2. Place the inlet end of the first chamber over the back edge of the endcap.

3. Lift and place the end of the next chamber onto the previous chamber by holding it at a 90-degree angle. Line up the chamber end between the connector hook and locking pin at the top of the first chamber. Lower it to the ground to connect the chambers.

NOTE: When the chamber end is placed between the connector hook and locking pin at a 90-degree angle, the pin will be visible from the back side of the chamber.

NOTE: The connector hook serves as a guide to insure proper connection and does not add structural integrity to the chamber joint. Broken hooks will not affect the structure nor void the warranty.

4. Swivel the chamber on the pin to the proper direction for the trench layout.

NOTE: The Quick4 Standard and Quick4 High Capacity chambers allow 10º of swivel in either direction at each joint. The Quick4 Equalizer 36 and Quick4 Equalizer 24 allow up to 15º of swivel.

5. Continue connecting the chambers until the trench is completed.

NOTE: As chambers are installed, verify they are level or have the prescribed slope to meet local code.

6. The last chamber in the trench requires an endcap. Lift the endcap at a 45-degree angle and insert the connector hook through the opening on the top of the endcap. Applying firm pressure, lower the endcap to the ground to snap it into place. Do not remove the tear-out seal.

2. Place first chamber onto endcap.

3. Connect the chambers.

4. Swivel the chamber.

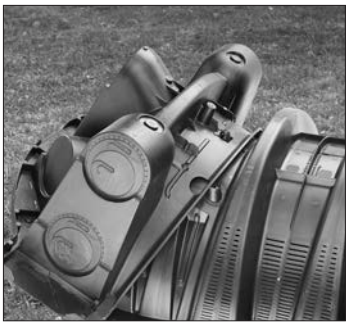

6. Attach endcap to chamber.

7. To ensure structural stability, fill the sidewall area by pulling soil from the sides of the trench with a shovel. Start at the joints where the chambers connect. Continue backfilling the entire sidewall area, making sure the fill covers the louvers.

8. Pack down the fill by walking along the edges of the trench and chambers. This is an important step in assuring structural support.

9. Proceed to the next trench and begin with Step 1.

NOTE: In wet or clay soils, do not walk in the sidewalls.

11. Proceed to the next trench and begin with Step 1.

Installing Optional Inspection Ports

1. With a hole saw drill the pre-marked area in the top of the chamber to create a 4-inch opening.
2. Set a cut piece of pipe of the appropriate length into the corresponding chamber's inspection port sleeve.
NOTE: The sleeve will accommodate a 4-inch SCH40 pipe.
3. Use two screws to fasten the pipe to the sleeve around the inspection port.
4. Attach a threaded cap or cleanout assembly onto the protruding pipe at the appropriate height.
5. A small valve cover box may be used if inspection port is below the desired grade.

Covering the System

NOTE: Before backfilling, the system must be inspected by a health officer or other official as required by State and local codes. Create an as-built drawing at this time for future records.

1. Backfill the trench by pushing fill material over the chambers with a backhoe. Keep a minimum of 12 inches of compacted cover over the chambers before driving over the system.
NOTE: Do not drive over system while backfilling in sand.
NOTE: For shallow cover applications, you must mound 12 inches of soil over the system before driving over it, and then grade it back to 6 inches upon completion.
2. It is best to mound several inches of soil over the finish grade to allow for settling. This also ensures that runoff water is diverted away from the system.
3. After the system is covered, the site should be seeded or sodded to prevent erosion.
NOTE: If the system is for new home construction it is important to leave marking stakes along the boundary of the system. This will notify contractors of the site location so they will not cross it with equipment or vehicles.

Quick4 Bed Systems

This section provides septic installation instructions for bed system designs in Vermont. Quick4 chambers may only be installed according to state and/or local regulations. If unsure of the installation requirements for a site, contact your state or local regulator.

Like conventional systems, the soil and site conditions must be approved for installation. Conduct a thorough site evaluation to determine the proper size and location of the system before installation.

Before You Begin

Materials and Equipment Needed

- ☐ Quick4 Chambers
- ☐ Multiport Endcaps
- ☐ 4" Pipe and Couplings
- ☐ Laser / Transit / 4-foot Level
- ☐ Glue
- ☐ Shovel and rake
- ☐ Tape measure
- ☐ Screwdriver or Utility knife
- ☐ Hole Saw
- ☐ Backhoe / Bulldozer
- ☐ Spray Paint*
- ☐ Stakes (4)*
- ☐ String line*

*Optional

These guidelines for construction machinery must be followed during installation.

- ☐ Avoid direct contact with chambers when using construction machinery. Maintain a minimum of 12 inches of compacted cover over the chambers. Chambers with this minimum covering can support AASHTO H-10 loads of 16,000 lb/axle in all soils.
- ☐ For shallow cover applications chambers require a 6-inch minimum of compacted cover to support a wheel load rating of 4,500 lbs/axle.
- ☐ Only drive across the trenches when necessary. Never drive down the length of them.
- ☐ To avoid additional soil compaction, never drive heavy vehicles over the completed system.

Excavating and Preparing the Site

NOTE: As is the case with conventional systems, do not install the system in wet conditions or in overly moist soils, as this causes machinery to smear the soil.

1. Stake out the location of all trenches and lines. Set the elevations of the tank, pipe, and trench bottom.

2. Install sedimentation and erosion control measures. Temporary drainage swales/berms may be installed to protect the site during rainfall events.

3. Excavate and level 3-foot wide trenches with proper center-to-center separation. Verify that the trenches are level or have the prescribed slope.

NOTE: Over excavate the trench width in areas where you are planning to contour.

4. Rake the bottom and sides if smearing has occurred while excavating. Remove any large stones and other debris. Do not use the bucket teeth to rake the trench bottom.

NOTE: Raking to eliminate smearing is not necessary in sandy soils. In fine textured soils (silts and clays), avoid walking in the trench to prevent compaction and loss of soil structure.

5. Verify that each trench is level using a level, transit or laser.

Preparing the Endcap

1. With a screwdriver or utility knife start the tear-out seal at the appropriate diameter for the inlet pipe. The seal allows for a tight fit for 3-inch, 4-inch SDR35, and 4-inch SCH40 pipe.

2. Pull the tab on the tear-out seal to create an opening on the endcap.

3. Snap off the molded splash plate located on the bottom front of the endcap.

4. Install splash plate into the appropriate slots below the inlet to prevent trench bottom erosion.

5. Insert the inlet pipe into the endcap at the beginning of the trench. Extend the pipe into the endcap roughly 4 inches. (Screws optional.)

1. Start tear-out seal.

2. Pull tab on tear-out seal.

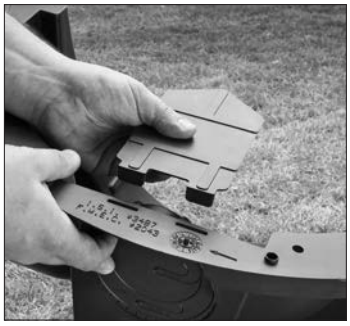

4. Install splash plate.

5. Insert inlet pipe.

Installing the System

1. Check the inlet pipe to be sure it is level or has the prescribed slope.

2. Set the invert height as specified per plan.

3. Place the inlet end of the first chamber over the back edge of the endcap.

4. Lift and place the end of the next chamber onto the previous chamber by holding it at a 90-degree angle.

Line up the chamber end between the connector hook and locking pin at the top of the first chamber. Lower it to the ground to connect the chambers.

3. Place first chamber onto endcap.

NOTE: When the chamber end is placed between the connector hook and locking pin at a 90-degree angle, the pin will be visible from the back side of the chamber.

NOTE: The connector hook serves as a guide to ensure proper connection and does not add structural integrity to the chamber joint. Broken hooks will not affect the structure or void the warranty.

5. Swivel the chamber on the pin to achieve the proper direction for the trench layout.

NOTE: The chamber allows up to a 15-degree swivel in either direction at each joint.

6. Continue connecting the chambers until the trench is completed.

4. Connect the chambers.

NOTE: As chambers are installed, verify they are level or have the prescribed slope.

7. The last chamber in the trench requires an endcap. Lift the endcap at a 45-degree angle and insert the connector hook through the opening on the top of the endcap. Applying firm pressure, lower the endcap to the ground to snap it into place. Do not remove the tear-out seal.

7. Attach endcap to chamber.

NOTE: Use straight lengths of pipe with the MultiPort Endcap at the trench ends to create fitting-free looped ends.

8. To ensure structural stability, fill the sidewall area by pulling soil from the sides of the trench with a shovel. Start at the joints where the chambers connect. Continue backfilling the entire sidewall area, making sure the fill covers the louvers.

9. Pack down the fill by walking along the edges of the trench and chambers. This is an important step in assuring structural support.

NOTE: In wet or clay soils, do not walk in the sidewalls.

10. Proceed to the next trench and begin with Step 1.

Covering the System

NOTE: Before backfilling, the system must be inspected by a health officer or other official as required by State and local codes. Create an as-built drawing at this time for future records.

1. Apply the desired backfill material along the sides of the chambers and walk the soil in.

2. NOTE: When backfilling a wide excavation or soil substitution system use a dozer, small box blade or a tracked Bobcat machine.

1. Walk the soil in.

2. Backfill the trench.

Fill/Mound Systems

This section provides septic installation instructions for fill/mound systems in Vermont. Quick4 chambers can only be installed according to state and/or local regulations. Contact your local regulator for specific requirements. Soil and site conditions must be approved prior to installation. Conduct a thorough site evaluation to determine proper sizing and siting of the system before installation.

These guidelines must be followed during installation:

- ☐ Avoid direct contact with chambers when using construction equipment. Chambers can be installed with 6-inch cover but if H-10 loading is required then install with a 12-inch minimum of compacted cover to support a wheel load rating of 16,000 lbs/axle or equivalent to an H-10 AASHTO load rating.
- ☐ Only drive across the trenches when necessary. Never drive wheeled machinery over chambers.
- ☐ Avoid stones larger than 3 inches in diameter in backfill. Remove stones this size or larger that are in contact with chambers.

Preparing the Site

1. Review site plans to determine the height of the seasonal high water table or other limiting factors.

2. Calculate the number of sand lifts necessary.

3. Confirm that the sand fill meets Section 1-921 (g) requirements

4. Install sedimentation and erosion control measures.

5. Cut trees flush to the ground. Above ground vegetation should be closely cut and removed. Do not remove surface boulders.

6. Refer to the engineer's plan for preparing subgrade. Prepare existing ground surface per Section 1-921

NOTE: Topsoil and subsoil should not be removed from beneath a mound wastewater disposal area.

Placing the Sand

1. Use a dozer or tracked vehicle to evenly spread a one-foot lift of specified fill material over required area.

2. Each sand lift must be tracked in by making several passes back and forth to consolidate the fill. The contractor may determine the means and methods necessary to stabilize fill. Add water if necessary to obtain appropriate moisture content.

NOTE: Stabilizing the fill is critical to prevent settling and will not have a significant effect on permeability of clean, sandy fill.

1. Evenly spread a one-foot lift of specified fill material.

3. To stabilize the fill, a tracked vehicle can be driven over the entire fill/mound. After first tracks are made across the fill/mound, move across the fill/mound at increments equal to the width of the wheels/tracks.

NOTE: Check local regulations to determine if wheeled vehicles are allowed on fill systems.

4. Place consecutive lifts following Steps 1 and 2 until design elevation is achieved (desired elevation is the infiltrative surface). Lifts should not exceed a 12 inch height.

5. Lightly drag a landscape rake over the final infiltrative surface to scarify the top 1⁄2-inch of the sand. Check bed elevation to be sure it is level.

Installing Chambers, Pressure Pipes and Endcaps

1. To allow pressure laterals to drain after each cycle, drill a hole in the underside at each end of the pipe. Then place a splash plate, paving block or an orifice shield below each drain hole to protect the infiltrative surface from erosion. All other orifices should be in the 12 o'clock position.

2. Drill the appropriately sized hole in the endcap at the proper elevation. Insert the pressure lateral pipe into the end plate hole and slide it into the manifold pipe.

3. Glue the pressure lateral pipe to the manifold pipe.

NOTE: Health Departments may require a pressure check. This may be done prior to chamber installation, when the pipe is laying on the ground. Check with your local Health Department for the proper procedure.

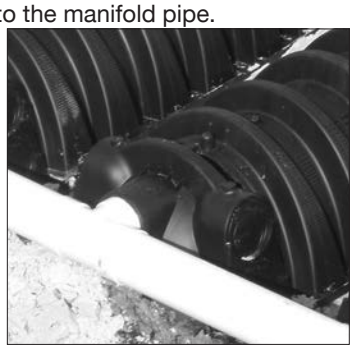

4. Secure lateral pipe to the top of the chamber.

4. Secure the pressure lateral pipe to the top of the first chamber with a PVC pipe strap at the outlet end of the unit. Slide the strap up through a slot in the chamber top, down through the other slot, and cinch the two ends around the pipe.

5. Lift and place the next chamber onto the previous one at a 90-degree angle. Line up the chamber end between the connector hook and locking pin at the top of the first chamber. Lower it to the ground to engage the interlocks.

6. Secure the lateral pipe to the top of the chamber once in place. Follow the same method as described in Step 4.

7. Continue interlocking chambers and pipe until trench is completed.

8. Attach an endcap to the last chamber in the trench. If cleanout extensions are required, create a hole in the endcap at the proper elevation to allow the lateral pipe to extend. For cleanout access, a 90° plumbing sweep that extends to the soil's surface can be attached to the lateral pipe.

9. Follow Steps 1-8 to lay the next row of chambers in the bed parallel to the first.

Covering the System

Before backfilling, the system must be inspected by a health or regulatory official as required by state and local codes. Create an as-built drawing at this time for future records.

1. Ladle sandfill between the chamber rows to the top of the chambers to prevent chamber movement before final backfill. Firm the soil between the chamber rows by walking it in. This important step assures correct structural support of the system.

NOTE: Sandfill should extend one foot beyond the edges of the chambers before the sides are sloped to the acceptable slope.

2. Push the cover material from the uphill side of the mound over the chamber rows with a dozer. Keep a minimum 12 inches of compacted cover over the system.

NOTE: NO wheeled machinery is allowed on chambers in mounds.

3. After the system is covered, the site should be seeded or sodded to prevent erosion.

NOTE: If the system is for new home construction, it is important to leave marking stakes along the boundary of the system. This will notify other contractors of the site location so they will stay off it with equipment or vehicles.

Low Profile Systems

Before You Begin

Quick4 Plus Standard Low Profile (LP) Chambers can only be installed according to state and/or local regulations. Soil and site conditions must be approved prior to installation. Conduct a thorough site evaluation to determine proper sizing and siting of the system before installation.

Materials and Equipment Needed

- ☐ Quick4 Plus LP Chambers
- ☐ Quick4 Plus All-in-One 8 or Q4 Plus 8 Endcaps
- ☐ PVC Pipe and Couplings
- ☐ Backhoe
- ☐ Laser / Transit / Level
- ☐ Shovel and rake
- ☐ Tape measure
- ☐ Utility knife
- ☐ 1 1/4-inch Drywall Screws*
- ☐ Screw Gun*
- ☐ Small Valve-cover Box*
- ☐ 4-inch Cap Inspection Port

*Optional

These guidelines for construction machinery must be followed during installation.

- ☐ Avoid direct contact with chambers when using construction machinery. Maintain a minimum of 12 inches of compacted cover over the chambers. Chambers with this minimum covering can support AASHTO H-10 loads of 16,000 lb/axle in all soils.
- ☐ Only drive across the trenches when necessary. Never drive down the length of them.
- ☐ To avoid additional soil compaction, never drive heavy vehicles over the completed system.

Installing the Chambers and Endcaps

1. To allow pressure laterals to drain after each dose, drill a hole in the bottom of the pipe at the end of the pressure line. Place the snap-off splash plate or a paving block at the bottom of the trench to protect the infiltrative surface from erosion.

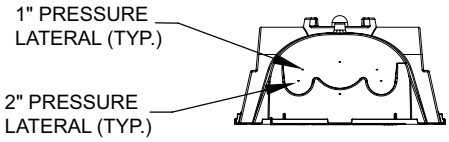

2. With a hole saw, drill the appropriate diameter orifices.

3. Insert the pressure lateral pipe into the endcap's drilled opening and slide it into the manifold pipe. Glue the pressure lateral pipe to the manifold pipe.

4. With the pressure lateral pipe through the endcap, place the back edge of the endcap over the inlet end of the first chamber. Be sure to line up the locking pins on the top of both the chamber and endcap.

NOTE: Health departments may require a pressure check prior to chamber installation when the pipe is visible. Check with your local health department for the proper procedure.

5. (Method A) With the orifices pointed up, secure the pressure pipe to the top of the first chamber with a plastic pipe strap at the outlet end of the unit. Slide the strap up through the slots and secure around the pipe.

6. (Method B) With the holes pointing up, stabilize the pressure lateral pipe on the ground to prevent it from moving.

7. Lift and place the next chamber onto the previous one at a 45-degree angle. Line up the chamber end between the connector hook and locking pin at the top of the first chamber. Lower it to the ground to engage the interlocks.

8. (Method A) Secure the lateral pipe to the top of the next chamber once in place. Follow the same method in Step 5.

9. Continue interlocking chambers and securing the pipe until the trench is completed.

2. Drill pressure pipe hole.

4. Place endcap over inlet end.

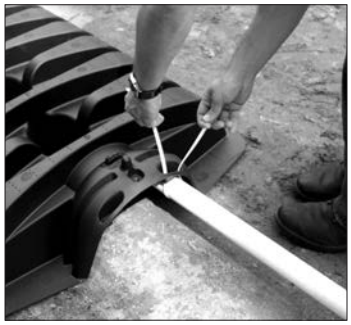

5. Secure pressure pipe.

10. Before attaching the final endcap, it may be necessary to remove the tongue of the connector hook on the last chamber with a pair of pliers depending on the pipe diameter.

11. Insert the pressure lateral pipe through the hole in the final endcap and slide the endcap toward the last chamber. Lift the endcap over the modified connector hook and push straight down to secure it to the chamber.

NOTE: If cleanout extensions are required, use a hole saw to cut a hole in the top of the Quick4 Plus All-in-One Endcap so the pressure lateral pipe with a plumbing sweep can extend to the ground surface. For cleanout access, use the "Installing Optional Inspection Ports" section in the general installation instructions.

12. If installing multiple rows of chambers, follow Steps 1-9 to lay the next row of chambers parallel to the first. Keep a minimum separation distance between each row of chambers as required by local code.

Lateral pipe through endcap.

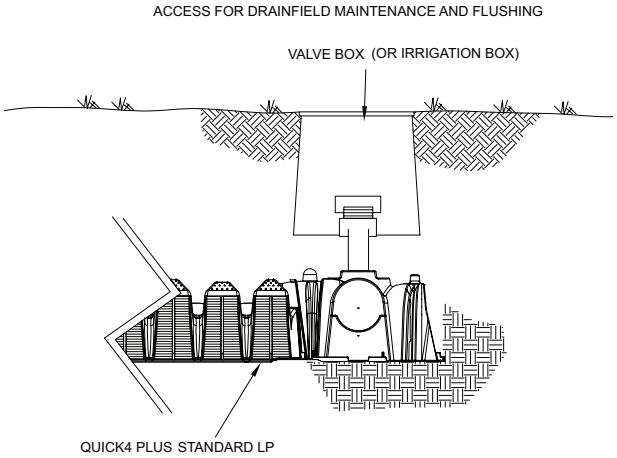

NOTE: INSTALL A LONG SWEEP OR TWO 45° BENDS; CAN ALSO BE INSTALLED OUTSIDE OF THE ENDCAP.

Advantages of Method A

- Pipe and orifice placed closer to the chamber dome offer improved distribution
- Pipe positioned at the top of the chamber places it well above effluent
- Plastic pipe hanger easily secures pipe in place

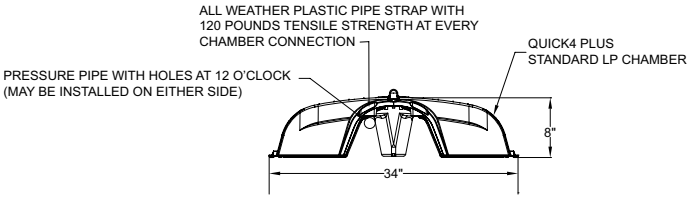

Advantage of Method B

- Pipe resting on the trench bottom allows easy installation and maintenance
- Stabilizing "T's" or J-hooks keep pipe level
- System promotes efficient pressure checks
- Pipe resting on the trench bottom allows easier inspections if monitoring ports are installed

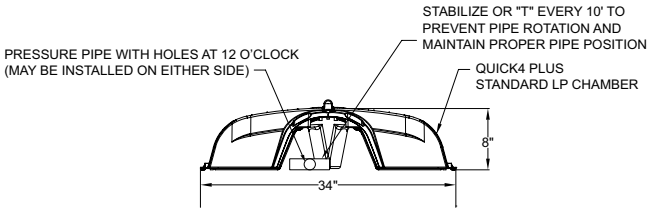

Vermont Limited Septic Warranty for Infiltrator Chambers

(a) The structural integrity of each chamber, endcap and other accessory manufactured by Infiltrator (collectively referred to as "Units"), when installed and operated in a leachfield of an onsite septic system in accordance with Infiltrator's installation instructions, is warranted to the original purchaser ("Holder") against defective materials and workmanship for five years from the date upon which a septic permit is issued for the septic system containing the Units; provided, however, that if a septic permit is not required for the septic system by applicable law, the five (5) year warranty period will begin upon the date that installation of the septic system commences. In order to exercise its warranty rights, Holder must notify Infiltrator in writing at its corporate headquarters in Old Saybrook, Connecticut within fifteen (15) days of the alleged defect. Infiltrator will supply replacement Units for those Units determined by Infiltrator to be defective and covered by this Limited Warranty. Infiltrator's liability specifically excludes the cost of removal and/or installation of the Units.

(b) THE LIMITED WARRANTY AND REMEDIES IN SUBPARAGRAPH (a) ARE EXCLUSIVE. THERE ARE NO OTHER WARRANTIES WITH RESPECT TO THE UNITS, INCLUDING NO IMPLIED WARRANTIES OF MERCHANTABILITY OR FITNESS FOR A PARTICULAR PURPOSE.

(c) This Limited Warranty shall be void if any part of the chamber system (chamber, endcap or other accessory) is manufactured by anyone other than Infiltrator. The Limited Warranty does not extend to incidental, consequential, special or indirect damages. Infiltrator shall not be liable for penalties or liquidated damages, including loss of production and profits, labor and materials, overhead costs, or other losses or expenses incurred by the Holder or any third party. Specifically excluded from Limited Warranty coverage are damage to the Units due to ordinary wear and tear, alteration, accident, misuse, abuse or neglect of the Units; the Units being subjected to vehicle traffic or other conditions which are not permitted by the installation instructions; failure to maintain the minimum ground covers set forth in the installation instructions; the placement of improper materials into the system containing the Units; failure of the Units or the septic system due to improper siting or improper sizing, excessive water usage, improper grease disposal, or improper operation; or any other event not caused by Infiltrator. This Limited Warranty shall be void if the Holder fails to comply with all of the terms set forth in this Limited Warranty.

Further, in no event shall Infiltrator be responsible for any loss or damage to the Holder, the Units, or any third party resulting from installation or shipment, or from any product liability claims of Holder or any third party. For this Limited Warranty to apply, the Units must be installed in accordance with all site conditions required by state and local codes; all other applicable laws; and Infiltrator's installation instructions.

(d) No representative of Infiltrator has the authority to change this Limited Warranty in any manner whatsoever, or to extend this Limited Warranty. No warranty applies to any party other than the original Holder.

The above represents the standard Limited Warranty offered by Infiltrator. A limited number of states and counties have different warranty requirements. Any purchaser of Units should contact Infiltrator's corporate headquarters in Old Saybrook, Connecticut, prior to such purchase, to obtain a copy of the applicable warranty, and should carefully read that warranty prior to the purchase of Units.

INFILTRATOR
water technologies

4 Business Park Road
P.O. Box 768
Old Saybrook, CT 06475
860-577-7000 • Fax 860-577-7001
1-800-221-4436
www.infiltratorwater.com
info@infiltratorwater.com

U.S. Patents: 4,759,661; 5,017,041; 5,156,488; 5,336,017; 5,401,116; 5,401,459; 5,511,903; 5,716,163; 5,588,778; 5,839,844 Canadian Patents: 1,329,959; 2,004,564 Other patents pending. Infiltrator, Equalizer, Quick4, and SideWinder are registered trademarks of Infiltrator Water Technologies. Infiltrator is a registered trademark in France. Infiltrator Water Technologies is a registered trademark in Mexico. Contour, MicroLeaching, PolyTuff, ChamberSpacer, MultiPort, PosiLock, QuickCut, QuickPlay, SnapLock and StraightLock are trademarks of Infiltrator Water Technologies.
PolyLok is a trademark of PolyLok, Inc. TUF-TITE is a registered trademark of TUF-TITE, INC. Ultra-Rib is a trademark of IPEX Inc.

© 2019 Infiltrator Water Technologies, LLC. All rights reserved. Printed in U.S.A.

C67 0919

Contact Infiltrator Water Technologies' Technical Services Department for assistance at 1-800-221-4436