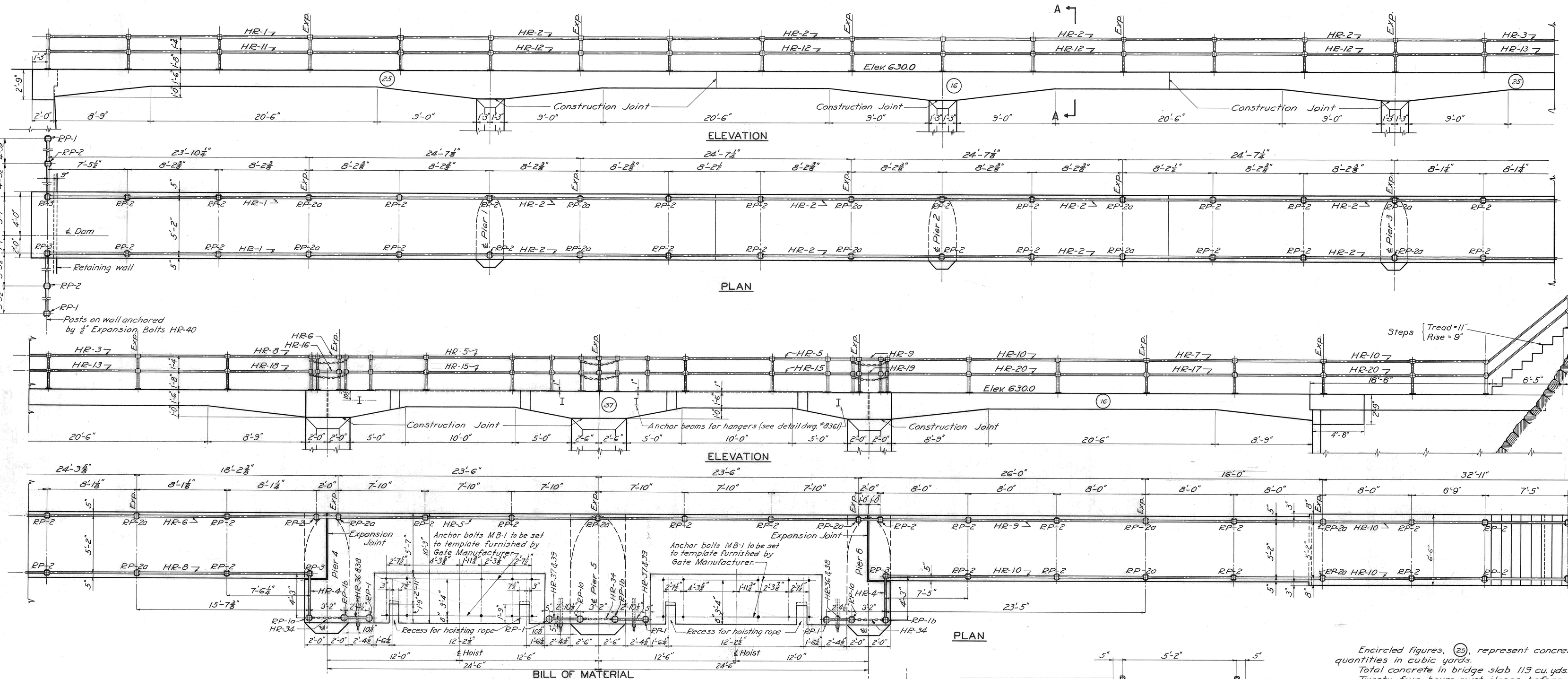

BILL OF MATERIAL

MARK	NO. REQ'D	DESCRIPTION	REMARKS
HR-1	2	2"ϕ Pipe Rail 23'-9" long	Std. Galv. Iron Pipe - Plain Ends
HR-2	8	" " " 24'-6" "	"
HR-3	2	" " " 24'-2½" "	"
HR-4	2	" " " 4'-1⅛" "	"
HR-5	2	" " " 23'-5" "	"
HR-6	1	" " " 18'-1⅛" "	"
HR-7	2	" " " 15'-11" "	"
HR-8	1	" " " 15'-6" "	"
HR-9	1	" " " 25'-11" "	"
HR-10	3	" " " 23'-3⅛" "	"
HR-11	2	1¼"ϕ Pipe Rail 23'-9" "	"
HR-12	8	" " " 24'-6" "	"
HR-13	2	" " " 24'-2½" "	"
HR-14	2	" " " 4'-1⅛" "	"
HR-15	2	" " " 23'-5" "	"
HR-16	1	" " " 18'-1⅛" "	"
HR-17	2	" " " 15'-11" "	"
HR-18	1	" " " 15'-6" "	"
HR-19	1	" " " 25'-11" "	"
HR-20	3	" " " 23'-3⅛" "	"
HR-38	2	" " " 2'-3" "	"
HR-39	2	" " " 2'-9" "	"
HR-36	2	2"ϕ Pipe Rail 2'-3" "	"
HR-37	2	" " " 2'-9" "	"
HR-32	175	⅜" Soft steel rivets	For 2" and 1¼" standard pipe fittings
HR-34	6	⅝" Std. close link chain with hook and ring, 3'-0" long.	Galvanized. (see detail)
RP-1	6	End Post complete.	See detail.
RP-1a	3	" " "	" " (Same as RP-1 except for addition of Straps)
RP-1b	3	" " "	" " (Same as RP-1 except for addition of Eye Bolts)
RP-2	44	Intermed. Post compl.	" "
RP-2a	19	Exp. Post complete.	" " (Same as RP-2 except for location of drilled holes)
RP-3	4	Corner Post complete.	" "
HR-40	16	⅝" "Cinch" expansion bolts or equal.	For anchoring posts on retaining wall.

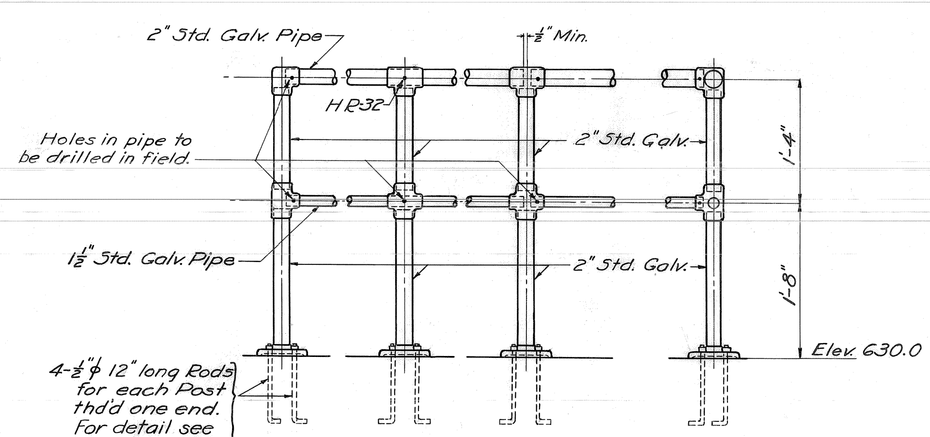

POSTS FOR HAND RAILS

SCALE 1" = 1'-0"

NOTE — All outlets for plain end pipe to be reamed. Anchor bolts to be furnished by others.

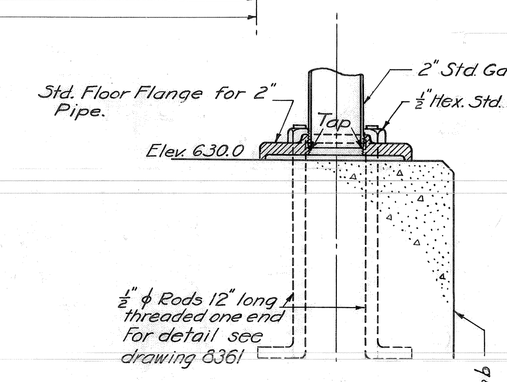

SECTION B-B

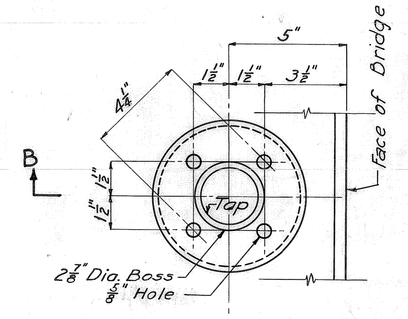

FLOOR FLANGE

SCALE 3" = 1'-0"

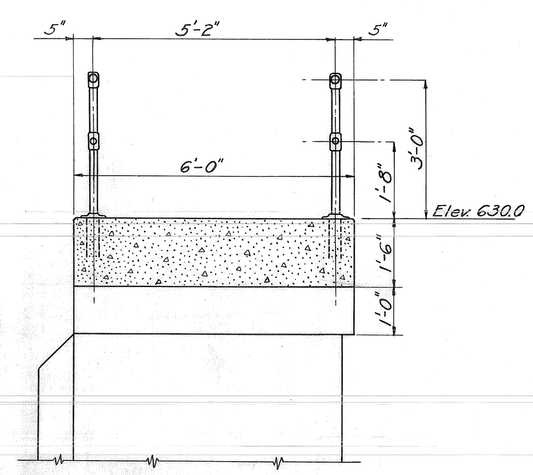

SECTION A-A

SCALE 1/2" = 1'-0"

Encircled figures, (25), represent concrete quantities in cubic yards.
Total concrete in bridge slab 119 cu. yds.
Twenty-four hours must elapse before concrete shall be placed in adjacent sections.

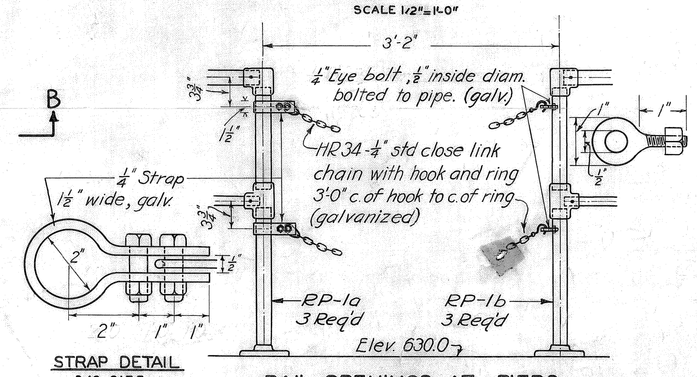

STRAP DETAIL 3/8 SIZE

RAIL OPENINGS AT PIERS

SCALE 1" = 1'-0"

NOTE

ALL WORK SHOWN ON THIS DRAWING SHOULD BE DONE IN ACCORDANCE WITH SPECIFICATIONS APPROVED BY THE CHIEF OF ENGINEERS U. S. ARMY APRIL 16, 1935 OR LATER MODIFICATIONS.

ELEVATIONS ARE IN FEET AND REFER TO THE PLANE OF MEAN SEA LEVEL AT SANDY HOOK, N.J.

MAJOR [illegible] THE DRAWING IS [illegible]

REVISIONS		
ISSUE NO.	DATE	REMARKS
1	10-1937	Added rail on retaining wall.
2	3-12-38	Added Location Anchor Bolts

WINOOSKI RIVER, VT.

FLOOD CONTROL PROJECT

WATERBURY DAM

CONCRETING SCHEME OF BRIDGE AND HAND RAILING

SCALE 1/4" = 1'-0" EXCEPT AS NOTED

1" 0 5' 10' 15' 20'

UNITED STATES ENGINEER OFFICE, NEW YORK DISTRICT, NEW YORK, N. Y.

Submitted Charles W. Parmele Engineer. Approved [illegible] Major, Corps of Engineers.

Recommended John M. Buckley Senior Engineer.

SEPT. 21, 1937.

8359