Stantec Consulting Services Inc.
55 Green Mountain Drive, South Burlington VT 05403-7824

June 9, 2016
File: 195310997

Attention:
Rebecca Pfeiffer, CFM
Department of Environmental Conservation – Rivers Program
One National Life Drive, Main 2
Montpelier, VT 05620-3522
rebecca.pfeiffer@vermont.gov

Reference: VTrans South Burlington IM CULV (24)
FHARC Individual Permit Application

Dear Ms. Pfeiffer,

On behalf of the Design-Build Team (D-B Team) for the Vermont Agency of Transportation (VTrans) South Burlington IM CULV (24) project, Stantec Consulting Services, Inc. (Stantec) has prepared the attached Flood Hazard Area & River Corridor (FHARC) Individual Permit Application. The D-B Team includes J.A. McDonald, Inc., Bradshaw Construction Corporation, Stantec, Fitzgerald & Halliday, and EIV Technical Services. The South Burlington IM CULV (24) project is an interstate maintenance project that includes replacement of four existing drainage culverts (numbers 63N and 63S; and 64N and 64S) under Interstate Route 89 (I-89) with new precast concrete box culverts. All of these existing culverts are in poor to serious condition, significantly undersized, and pose a safety concern given their potential for failure in the near future.

As requested, additional project information is provided below to facilitate your review:

Property owner:
State of Vermont/VTrans
Jeff Ramsey, Environmental Specialist Supervisor
Vermont Agency of Transportation
Environmental Section
1 National Life Drive
Montpelier, VT 05633
(802) 828-1278
jeff.ramsey@vermont.gov

Project location: Interstate 89, South Burlington, Vermont (44.4458N/73.1475W; 44.4493N/73.1683W)

Project description: The South Burlington IM CULV (24) interstate maintenance project includes replacement of four existing drainage culverts with new precast concrete box culverts. Culverts 63N and 63S convey Potash Brook under I-89 approximately 1.7 miles north of Exit 12, while culverts 64N and 64S convey an unnamed tributary to Potash Brook approximately 0.9 miles south of Exit 13. The existing 63N and 63S culverts are 7-foot diameter corrugated metal pipe (CMP) culverts, and

the existing 64N and 64S culverts are corrugated metal arch culverts, 9 feet wide by 6.5 feet high. The proposed 63N and 63S culverts are 13 feet wide, while the proposed 64N and 64S culverts are 16 feet wide. All have 2.1 feet or more of natural bottom substrate and are sized for improved hydraulic capacity and Aquatic Organism Passage (AOP).

Temporary detours will be provided, and the highway will remain operational during this process. The existing culverts will remain in place and operational while the new culverts are constructed. Upon installation of the new culverts the old culverts will be abandoned and backfilled with flowable fill. Temporary access roads, staging areas, and laydown areas are also included in the project. The culvert replacement work is planned for the 2017 construction season.

The project meets the VI(a) "River Corridor No Adverse Impact Standard" as the culverts are (B) "…functionally dependent uses that must be placed in or over rivers and streams." The project will result in a minimal decrease in flood storage capacity due to the headwalls/wingwalls required to protect the new culverts. However, this will be offset by the increased capacity of the culverts and the storage provided in the adjacent wetlands.

Adjoining Landowners:
Culverts 63
Burlington Properties LP
Burlington Properties LTD,
85 Meadowland Drive,
South Burlington, VT 05403

Pizzagalli Properties, LLC
462 Shelburne Road, #1
South Burlington, VT 05403

Culverts 64
835 Hinesburg Road, LLC
2 Church Street
Burlington, VT 05401

City of South Burlington
575 Dorset St,
South Burlington, VT 05403

Twin Oaks Condominiums Association
95 Twin Oaks Terrace
South Burlington, VT 05403

Reference: South Burlington IM CULV (24) FHARC Individual Permit Application

Contractor:
Eric Boyden, President
J.A. McDonald, Inc.
585 Gilman Road
P.O. Box 132
Lyndon Center, VT 05850
eric@jamcdonald.com
802-626-5201

Maps. An ANR Location map (with the SFHA and River Corridor) and FEMA maps are attached. Relevant project plans are also provided. These include the Title Sheet, Preliminary Information Sheets (with hydraulic and hydrology information), Culvert Sections, Culvert Profiles, Construction Sequencing Plans, and Plan/Longitudinal Sections.

If there are any questions regarding this information, feel free to contact me.

Regards,

STANTEC CONSULTING SERVICES, INC.

George Bogue
Senior Associate
Phone: (802) 497-6325
George.bogue@stantec.com

Attachments: FHARC Individual Permit Application
ANR SFHA Location Map
FEMA Maps
South Burlington IM CULV (24) FHARC Plan Set

VERMONT AGENCY OF NATURAL RESOURCES

FLOOD HAZARD AREA & RIVER CORRIDOR RULE

Individual Permit Application

10 V.S.A. § 754

Applicant Name: Vermont Agency of Transportation

Mailing Address: 1 National Life Drive, Montpelier, VT 05633

Phone: 802-828-1278 Cell: Email: jeff.ramsey@vermont.gov

Landowner (if different than applicant, please attach easement): (same)

Landowner Mailing Address:

Phone: Email

Consultant or Designer: Stantec Consulting Services, Inc. Phone: 802-864-0223 Email: george.bogue@stantec.com

Contractor: J.A. McDonald Phone: 802-535-7313 Email: eric@jamcdonald.com

Project Location: Address: I-89 culverts 63/64 Town: South Burlington

Flooding Source: Potash Brook/trib to Potash Brook Lat: 44.4458/44.4493 Long: -73.1475/-73.168

General description of proposed development:

Replacement of existing pipe culverts beneath I-89 with new AOP precast concrete box culverts. Existing culverts will remain in place throughout construction, and stream will be relocated to new culverts. Old culverts will be abandoned and filled with flowable fill.

Category of Development Exempt from Municipal Regulation:

■ State owned or operated institution or facility
☐ Accepted Agricultural or Silvicultural Practice
☐ Power generating, transmission or telecommunication facility subject to Section 248/248a

Type of Development (check all that apply):

Structural Development (walled/roofed building) Structure type/use:

☐ New structure ☐ Replacement structure ☐ Relocation of existing structure
☐ Addition to existing structure ☐ Alteration to existing structure ☐ Repair of a substantially damaged structure
■ Other: Replace existing culverts under I-89 with new properly sized box c

The new or substantially improved structure will be: ☐ Elevated ☐ Dry floodproofed ☐ Wet floodproofed N/A

Value of Existing Structure: N/A

Value Source: ☐ Tax Assessment ☐ Appraisal ☐ Other, describe:

Estimated cost of improvements or repairs (materials and labor): N/A

Other development activities:

■ Roadway or stream crossing construction ■ Fill ■ Excavation
☐ Utility/infrastructure work: Description:
☐ Above ground ☐ Below ground ☐ Other (describe):

Map Information:

FEMA Flood Insurance Rate Map: Community/ Panel #: 50007C0258D; and 5007C0259D Panel Date: July 18, 2011 Flood Zone: A

Within Floodway? ☐ yes ■ no

Located in ANR River Corridor? ■ yes ☐ no

Submittal requirements (as appropriate to the proposed development):

■ Site Location Map – either an overview map of the site location generated from an internet application (i.e. Google or Bing) or a Vermont Natural Resource Atlas map (http://anrmaps.vermont.gov/websites/anra/)

■ Site plan(s) and schematics showing the following:

- Existing and proposed contours/elevations on the property in the same elevation datum as the most recent and effective NFIP Flood Insurance Rate Map (FIRM);
- Location and extent of any proposed fill and/or excavation for the project;
- NFIP Floodway delineation; NFIP Flood Fringe delineation boundary, Base Flood Elevation, ANR River Corridor Boundary;
- A scale bar, elevation datum conversions (where appropriate), and north arrow;
- Clearly labeled features including relevant landmarks, roadway names, stream names, and existing and/or proposed: buildings, utility/water infrastructure, and roads or driveways;
- Foundation and anchoring details, including extent of foundation walls and footings below grade, anchoring design specifications, and size and location of flood openings/vents; N/A
- A FEMA Elevation Certificate for proposals involving new or substantially improved structures; N/A
- A FEMA Floodproofing Certificate for proposals involving dry-floodproofing in lieu of elevation; N/A
- Mechanical, Electrical, and Plumbing details (elevation above base flood elevation or design specifications to be watertight below base flood elevation). N/A

Note: elevation data must be certified by a registered engineer or licensed land surveyor

Development proposed in the floodway:

☐ Hydraulic calculations demonstrating no rise in base flood elevation or velocity, certified by a registered professional engineer, including electronic input/output files and mapping showing cross section locations. N/A

☐ Simplified analysis and supporting documentation (minor projects) N/A

Proposed fill in the flood fringe:

■ Compensatory storage volumetric analysis and computations demonstrating no loss of flood storage volume, certified by a registered professional engineer

Minor fill to protect head/wingwalls adjacent to the proposed culvert will not affect compensatory flood storage in the adjacent Potash Brook or unnamed tributary floodplains, and will be partially offset by the additional capacity of the culverts and adjacent wetlands.

Proposal within an Approximate Zone A Flood Hazard Area:

■ Base flood elevation and floodway hydrologic and hydraulic calculations and supporting documentation, developed in accordance with FEMA Guidelines and Standards for Flood Risk Analysis and Mapping and certified by a registered professional engineer.

■ List of adjoining landowners with names and mailing addresses

Preliminary Information sheets attached

APPLICANT MUST FILE COPY OF THIS APPLICATION WITH TOWN CLERK AND ADJOINERS

CERTIFICATION: I hereby certify that the information on this application is, to the best of my knowledge, true and accurate and that I have provided a copy of this application to the Clerk of the municipality in which this activity is located, the local and regional planning commissions, and to each adjoining landowner as required in the Vermont Flood Hazard Area and River Corridor Rule. **I recognize that by signing this application I am giving consent to employees of the State to enter the subject property for the purpose of processing this application and for ensuring compliance with subsequent agency decisions relating to the project.**

Print Full Name

Applicant Signature [signature] Date 06/08/16

Submit application to:
Department of Environmental Conservation – Rivers Program
One National Life Drive; Main 2 – Montpelier, VT 05620-3522
ANR.WSMDRivers@state.vt.us

So Burlington IM CULV(24) SFHA Info

Vermont Agency of Natural Resources

vermont.gov

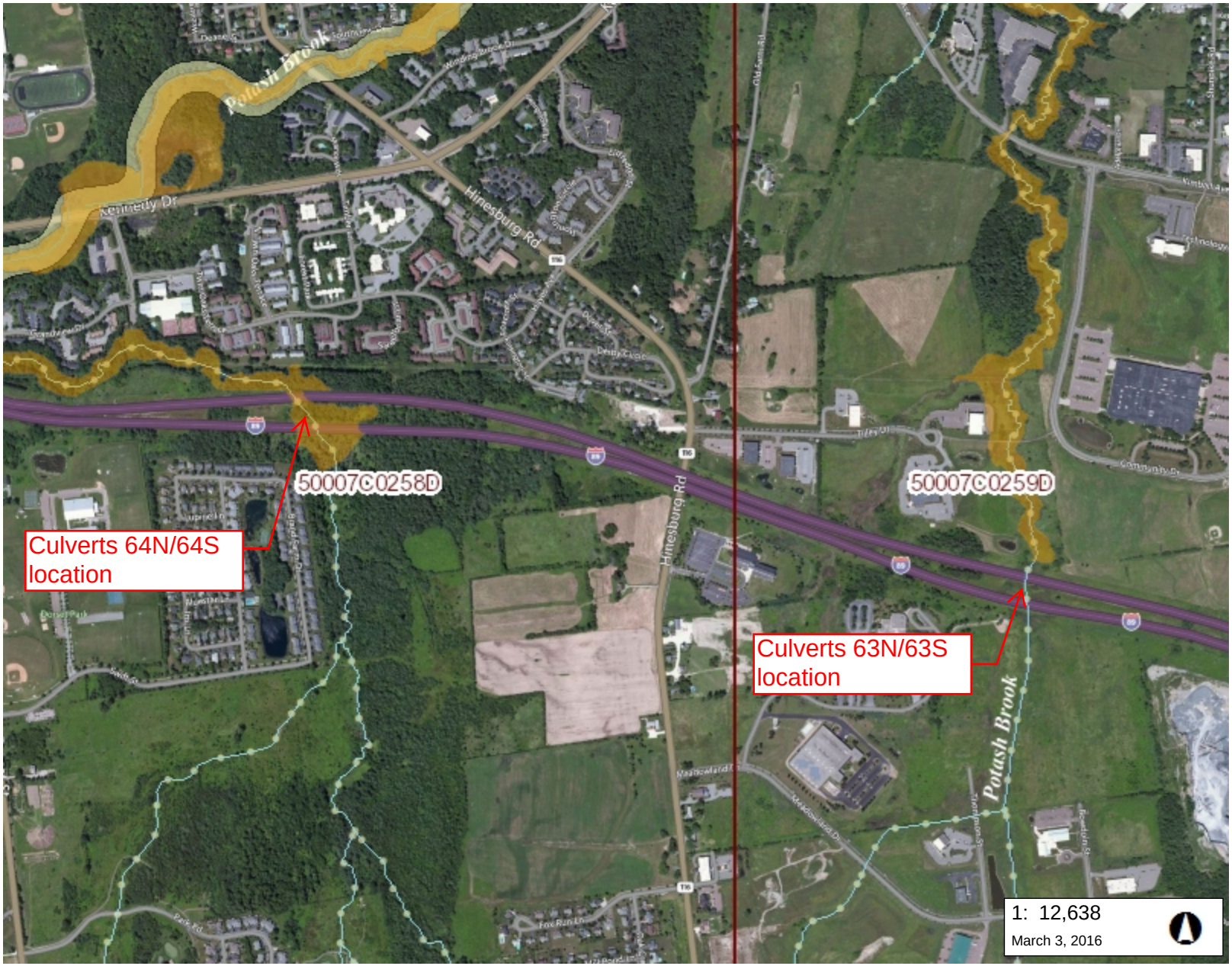

LEGEND

- DFIRM X-Sections
- DFIRM Panels
- DFIRM Floodways
- Special Flood Hazard Areas (A Counties)
  - AE (1-percent annual chance floodp
  - A (1-percent annual chance floodpl
  - AO (1-percent annual chance zone feet)
  - 0.2-percent annual chance flood ha
- River Corridors (Jan 2, 2015)
- Small Streams - 50ft Setback
- Stream
- Town Boundary

NOTES

Map created using ANR's Natural Resources Atlas

642.0 0 321.00 642.0 Meters

WGS_1984_Web_Mercator_Auxiliary_Sphere 1" = 1053 Ft. 1cm = 126 Meters

© Vermont Agency of Natural Resources

THIS MAP IS NOT TO BE USED FOR NAVIGATION

DISCLAIMER: This map is for general reference only. Data layers that appear on this map may or may not be accurate, current, or otherwise reliable. ANR and the State of Vermont make no representations of any kind, including but not limited to, the warranties of merchantability, or fitness for a particular use, nor are any such warranties to be implied with respect to the data on this map.

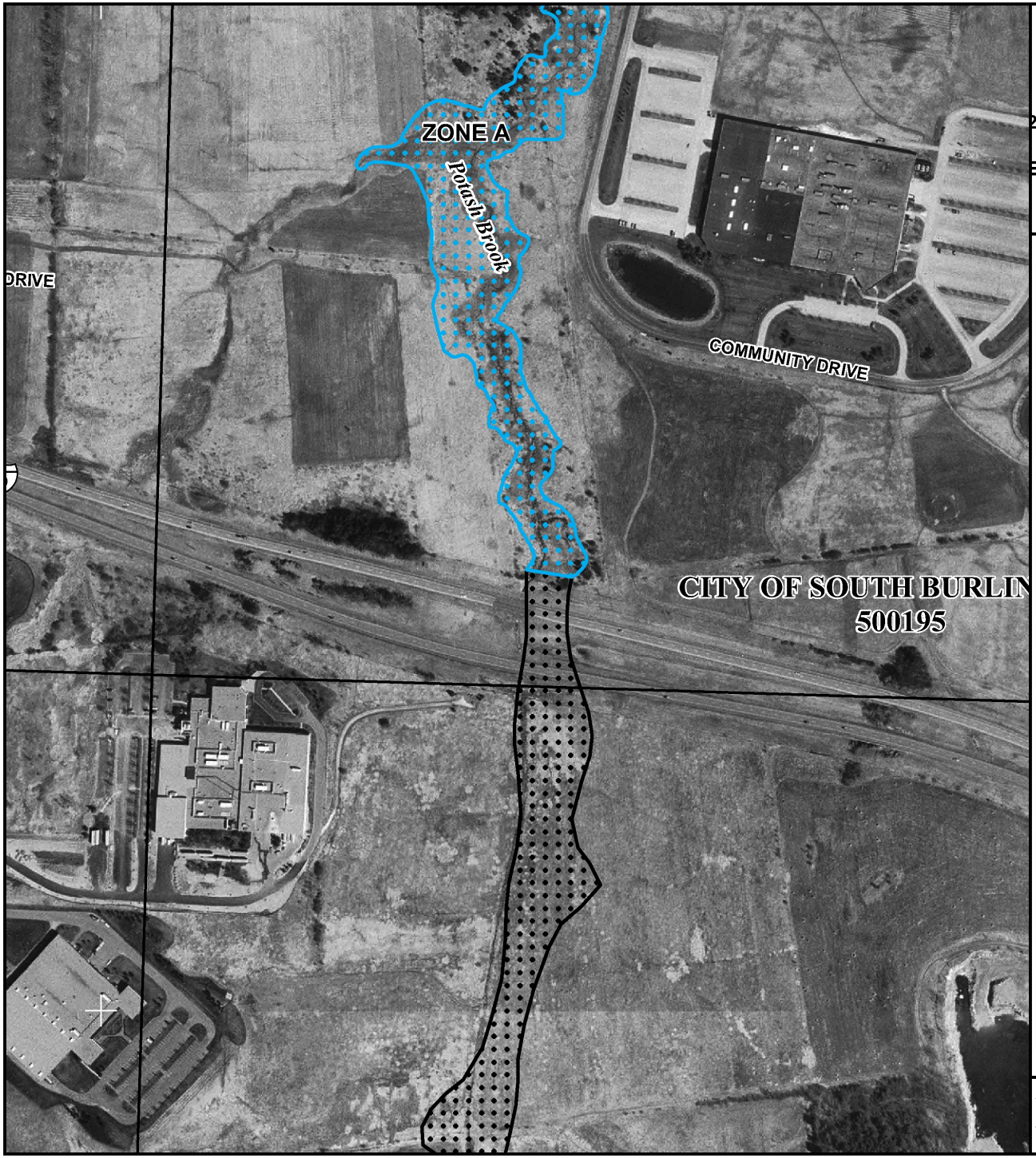

MAP SCALE 1" = 500'

250 0 500 1000

FEET

METERS

NFIP

NATIONAL FLOOD INSURANCE PROGRAM

PANEL 0259D

FIRM

FLOOD INSURANCE RATE MAP

CHITTENDEN COUNTY, VERMONT

(ALL JURISDICTIONS)

PANEL 259 OF 500

(SEE MAP INDEX FOR FIRM PANEL LAYOUT)

CONTAINS:

COMMUNITY	NUMBER	PANEL	SUFFIX
SOUTH BURLINGTON, CITY OF	500195	0259	D
WILLISTON, TOWN OF	500043	0259	D

Notice to User: The **Map Number** shown below should be used when placing map orders; the **Community Number** shown above should be used on insurance applications for the subject community.

MAP NUMBER
50007C0259D

EFFECTIVE DATE
JULY 18, 2011

Federal Emergency Management Agency

This is an official copy of a portion of the above referenced flood map. It was extracted using F-MIT On-Line. This map does not reflect changes or amendments which may have been made subsequent to the date on the title block. For the latest product information about National Flood Insurance Program flood maps check the FEMA Flood Map Store at www.msc.fema.gov

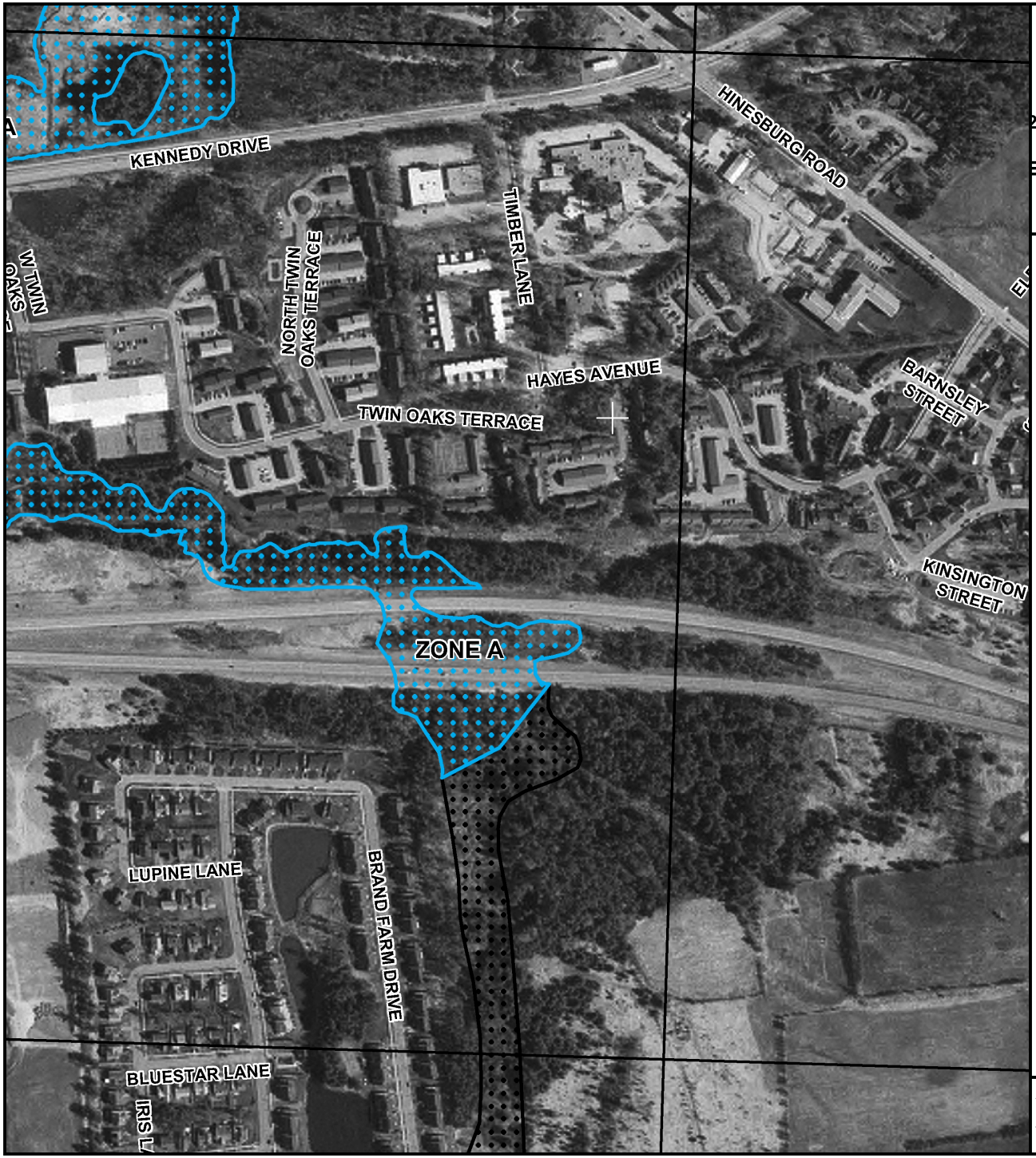

MAP SCALE 1" = 500'

250 0 500 1000 FEET

METERS

NFIP

NATIONAL FLOOD INSURANCE PROGRAM

PANEL 0258D

FIRM

FLOOD INSURANCE RATE MAP

CHITTENDEN COUNTY, VERMONT

(ALL JURISDICTIONS)

PANEL 258 OF 500

(SEE MAP INDEX FOR FIRM PANEL LAYOUT)

CONTAINS:

COMMUNITY	NUMBER	PANEL	SUFFIX
SOUTH BURLINGTON, CITY OF	500195	0258	D

Notice to User: The **Map Number** shown below should be used when placing map orders; the **Community Number** shown above should be used on insurance applications for the subject community.

MAP NUMBER
50007C0258D

EFFECTIVE DATE
JULY 18, 2011

Federal Emergency Management Agency

This is an official copy of a portion of the above referenced flood map. It was extracted using F-MIT On-Line. This map does not reflect changes or amendments which may have been made subsequent to the date on the title block. For the latest product information about National Flood Insurance Program flood maps check the FEMA Flood Map Store at www.msc.fema.gov

STATE OF VERMONT
AGENCY OF TRANSPORTATION

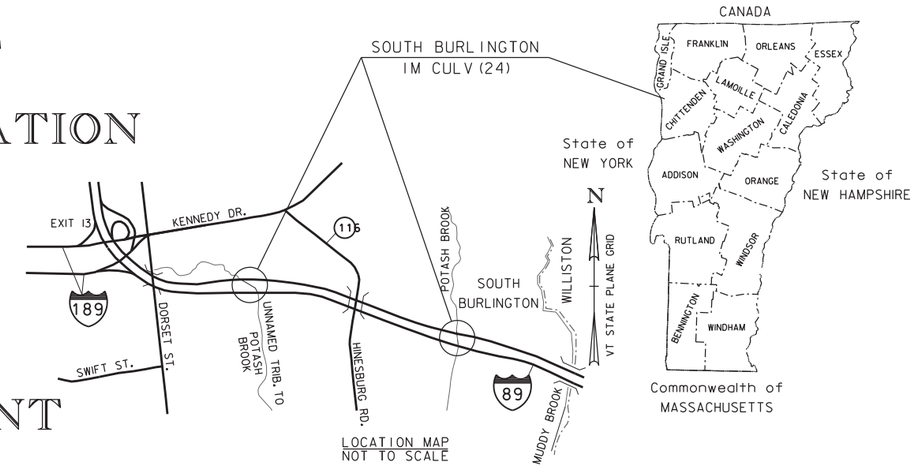

LOCATION MAP
NOT TO SCALE

PROPOSED IMPROVEMENT
CULVERT PROJECTS
CITY OF SOUTH BURLINGTON
COUNTY OF CHITTENDEN

BITUMINOUS CONCRETE PAVEMENT SUPERPAVE MIXTURE DESIGN CRITERIA	
DESIGN LANE/DESIGN LIFE ESALS	
DESIGN NUMBER OF GYRATIONS	

ROUTE: I-89 (PRINCIPAL ARTERIAL - INTERSTATE) CULVERT NOS. 63-1N, 63-1S, 64-1N, AND 64-1S

PROJECT LOCATION: LOCATED IN THE COUNTY OF CHITTENDEN, CITY OF SOUTH BURLINGTON, ON I-89; CULVERT NOS. 63-IN AND 63-IS CONVEYS POTASH BROOK, APPROXIMATELY 0.7 MILES WEST OF THE WILLISTON/SOUTH BURLINGTON TOWN LINE AND CULVERT NOS. 64-IN AND 64-IS CONVEYS AN UNNAMED TRIBUTARY TO POTASH BROOK, APPROXIMATELY 1.8 MILES WEST OF THE WILLISTON/SOUTH BURLINGTON TOWN LINE.

PROJECT DESCRIPTION: WORK TO BE PERFORMED UNDER THIS PROJECT INCLUDES THE REPLACEMENT OF THE EXISTING CULVERTS AND DECOMMISSIONING THE EXISTING CULVERTS, WITH ASSOCIATED ROADWAY AND CHANNEL WORK.

LENGTH OF PROJECT:

63-IN	120.0 FT
64-IN	127.0 FT
I-89N	247.0 FT
63-IS	125.0 FT
64-IS	125.0 FT
I-89S	250.0 FT
TOTAL =	497.0 FT

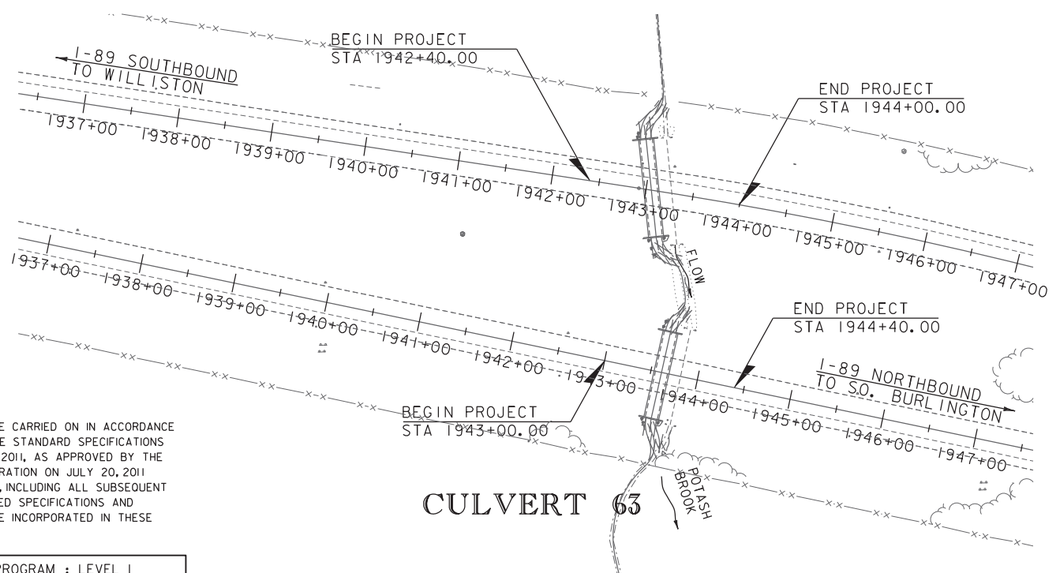

CULVERT 63

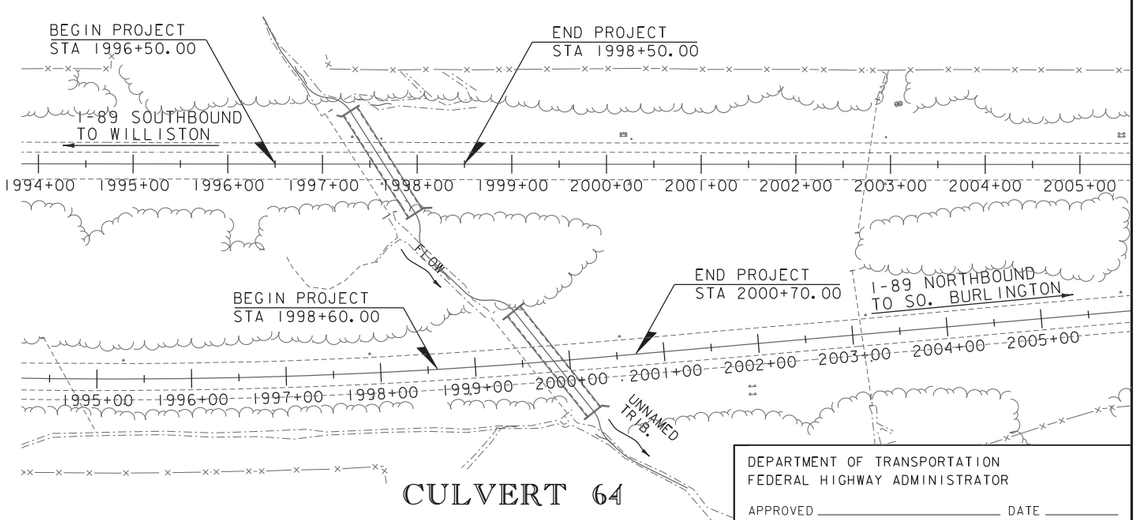

CULVERT 64

CONSTRUCTION IS TO BE CARRIED ON IN ACCORDANCE WITH THESE PLANS AND THE STANDARD SPECIFICATIONS FOR CONSTRUCTION DATED 2011, AS APPROVED BY THE FEDERAL HIGHWAY ADMINISTRATION ON JULY 20, 2011 FOR USE ON THIS PROJECT, INCLUDING ALL SUBSEQUENT REVISIONS AND SUCH REVISED SPECIFICATIONS AND SPECIAL PROVISIONS AS ARE INCORPORATED IN THESE PLANS.

QUALITY ASSURANCE PROGRAM : LEVEL I

SURVEYED BY : VHB
SURVEYED DATE : 2013

DATUM
VERTICAL NAVD88
HORIZONTAL NAD83 (1992)

SCALE 1" = 80'-0"
40 0 40

30% PLAN SET
APRIL 2016

Stantec
Stantec Consulting Services Inc.
55 Green Mountain Drive
South Burlington VT U.S.A. 05403
Phone: (802) 864-0223
Fax: (802) 864-0165
www.stantec.com

DEPARTMENT OF TRANSPORTATION
FEDERAL HIGHWAY ADMINISTRATOR
APPROVED _____ DATE _____

DIRECTOR OF PROJECT DELIVERY
APPROVED _____ DATE _____

PROJECT MANAGER : TODD SUMNER

PROJECT NAME : SOUTH BURLINGTON
PROJECT NUMBER : IM CULV(24)

SHEET 1 OF 135 SHEETS

STATE OF VERMONT
AGENCY OF TRANSPORTATION

PRELIMINARY INFORMATION SHEET (BRIDGE) - 63-1S & 63-1N

Version
LRFD

INDEX OF SHEETS

PLAN SHEETS

1	TITLE SHEET
2	PRELIMINARY INFORMATION SHEET - 63
3	TYPICAL SECTIONS - 63
4	APPROACH DETAILS - 63
5	CONVENTIONAL SYMBOLOGY LEGEND
6 - 8	LAYOUT SHEETS 1-3 - 63
9 - 10	ROADWAY PROFILES - 63
11	CHANNEL PROFILE - 63
12 - 14	63 - SEQUENCING - PHASES 1-6
15	63 - TRAFFIC CONTROL NOTES & DETAILS
16 - 17	63 - PHASING AND TRAFFIC CONTROL TYP. 1-2
18 - 20	63 TRAFFIC CONTROL PATTERN 1 - SHEETS 1-3
21 - 23	63 TRAFFIC CONTROL PATTERN 2 - SHEETS 1-3
24 - 29	63 - DIVERSION PROFILE SHEETS
30	BORING LAYOUT - 63
31 - 36	BORING LOGS - 63
37	NORTHBOUND PLAN/LONG. SECTION - 63
38	SOUTHBOUND PLAN/LONG. SECTION - 63
39	STRUCTURE DETAILS - 63 SB
40	STRUCTURE DETAILS - 63 NB
41 - 46	63 - NORTHBOUND CROSS SECTIONS 1-6
47 - 51	63 - SOUTHBOUND CROSS SECTIONS 1-5
52 - 55	63 - CHANNEL CROSS SECTIONS 1-4
56	EPSC NARRATIVE - 63 (NOT INCLUDED IN THIS SUBMITTAL)
57 - 59	EPSC EXISTING CONDITIONS PLAN SHEET 1-3 - 63
60 - 62	EPSC CONSTRUCTION PLAN SHEET 1-3 - 63
63 - 65	EPSC FINAL CONDITIONS PLAN SHEET 1-3 - 63
66 - 68	EPSC DETAILS 1-3 - 63
69	PRELIMINARY INFORMATION SHEET - 64
70	TYPICAL SECTIONS - 64
71	APPROACH DETAILS - 64
72 - 74	LAYOUT SHEET 1-3 - 64
75 - 76	ROADWAY PROFILES - 64
77	CHANNEL PROFILE - 64
78	64 - TRAFFIC CONTROL NOTES & DETAILS
79 - 81	64 - SEQUENCING - PHASES 1-6
82 - 83	64 - PHASING AND TRAFFIC CONTROL TYP. 1-2
84 - 86	64 TRAFFIC CONTROL PATTERN 1 - SHEETS 1-3
87 - 89	64 TRAFFIC CONTROL PATTERN 2 - SHEETS 1-3
90 - 95	64 - DIVERSION PROFILE SHEETS
96	BORING LAYOUT - 64
97 - 102	BORING LOGS - 64
103	NORTHBOUND PLAN/LONG. SECTION - 64
104	SOUTHBOUND PLAN/LONG. SECTION - 64
105	STRUCTURE DETAILS - 64 SB
106	STRUCTURE DETAILS - 64 NB
107 - 112	64 - NORTHBOUND CROSS SECTIONS 1-6
113 - 118	64 - SOUTHBOUND CROSS SECTIONS 1-6
119 - 122	64 - CHANNEL CROSS SECTIONS 1-4
123	EPSC NARRATIVE - 64 (NOT INCLUDED THIS SUBMITTAL)
124 - 126	EPSC EXISTING CONDITIONS PLAN SHEET 1-3 - 64
127 - 129	EPSC CONSTRUCTION PLAN SHEET 1-3 - 64
130 - 132	EPSC FINAL PLAN SHEET 1-3 - 64
133 - 135	EPSC DETAILS 1-3 - 64

STANDARDS LIST

B-5	SLOPE GRADING, EMBANKMENTS, MUCK	06-01-1994
E-192	PAVEMENT MARKING DETAILS	10-12-2000
F-1	WOVEN WIRE FENCE DETAILS	06-01-1994
T-1	TRAFFIC CONTROL GENERAL NOTES	04-25-2016
T-2	TRAFFIC SIGN GENERAL NOTES	04-25-2016
T-11	CONSTRUCTION APPROACH SIGNING DIVIDED HIGHWAY ONE LANE CLOSED	08-06-2012
T-12	TRAFFIC CONTROL DIVIDED HIGHWAY ONE LANE CLOSED	08-06-2012
T-13	TRAFFIC CONTROL DIVIDED HIGHWAY ONE LANE CLOSED	08-06-2012
T-22	TRAFFIC CONTROL FOR PAVEMENT MARKING ON DIVIDED HIGHWAY	08-06-2012
T-23	TRAFFIC CONTROL FOR PAVEMENT MARKING ON DIVIDED HIGHWAY	08-06-2012
T-28	CONSTRUCTION SIGN DETAILS	08-06-2012
T-29	CONSTRUCTION SIGN DETAILS	08-06-2012
T-30	CONSTRUCTION SIGN DETAILS	08-06-2012
T-31	CONSTRUCTION SIGN DETAILS	08-06-2012
T-35	CONSTRUCTION ZONE LONGITUDNAL DROP-OFFS	08-06-2012
T-36	CONSTRUCTION ZONE LONGITUDNAL DROP-OFFS FOR PAVING	08-06-2012
T-40	DELINEATORS AND MILEPOSTS	01-02-2013
T-43	FREEWAY - EXPRESSWAY DELINEATOR PLACEMENT	04-09-2014
T-45	SQUARE TUBE SIGN POST AND ANCHOR	01-02-2013
T-55	SIGN PLACEMENT EXPRESSWAY AND FREEWAY	10-26-2015

STRUCTURES DETAIL SHEETS

FINAL HYDRAULIC REPORT

HYDROLOGIC DATA

Date: July 10, 2015

DRAINAGE AREA : 0.80 sq. mi
CHARACTER OF TERRAIN : Hilly to Flat, Partially wooded
STREAM CHARACTERISTICS : Perennial, sinuous, alluvial with low relief to floodplains
NATURE OF STREAMBED : Sand, Silt

PEAK FLOW DATA

Q 2.33 =	30	Q 50 =	102
Q 10 =	48	Q 100 =	121
Q 25 =	85	Q 500 =	180

DATE OF FLOOD OF RECORD : unknown
ESTIMATED DISCHARGE: unknown
WATER SURFACE ELEV.: unknown
NATURAL STREAM VELOCITY : @ Q50 = 4.3 fps
ICE CONDITIONS : Low
DEBRIS: Low
DOES THE STREAM REACH MAXIMUM HIGHWATER ELEV. RAPIDLY? No
IS ORDINARY RISE RAPID? No
IS STAGE AFFECTED BY UPSTREAM OR DOWNSTREAM CONDITIONS? NO
IF YES, DESCRIBE:

WATERSHED STORAGE: <4% HEADWATERS:
UNIFORM: X
IMMEDIATELY ABOVE SITE:

EXISTING STRUCTURE INFORMATION

STRUCTURE TYPE: CGMP
YEAR BUILT: 1963
CLEAR SPAN(NORMAL TO STREAM): 7.0'
VERTICAL CLEARANCE ABOVE STREAMBED: 7.0'
WATERWAY OF FULL OPENING: 38.5 sq. ft.
DISPOSITION OF STRUCTURE: Fill and Abandon
TYPE OF MATERIAL UNDER SUBSTRUCTURE: unknown

WATER SURFACE ELEVATIONS AT:

	UPSTREAM END OF 63-1S		DOWNSTREAM END OF 63-1N
Q2.33 =	332.5'	VELOCITY =	3.4 fps
Q10 =	333.7'	"	5.7 fps
Q25 =	334.3'	"	7.1 fps
Q50 =	334.8'	"	7.9 fps
Q100 =	335.3'	"	8.3 fps

LONG TERM STREAMBED CHANGES:

IS THE ROADWAY OVERTOPPED BELOW Q100: No
FREQUENCY: Above Q500
RELIEF ELEVATION: 341.6'
DISCHARGE OVER ROAD @Q100: None

UPSTREAM STRUCTURE

TOWN: South Burlington DISTANCE: 00.5 mi
HIGHWAY # : Meadowland Drive STRUCTURE #:
CLEAR SPAN: CLEAR HEIGHT:
YEAR BUILT: FULL WATERWAY:
STRUCTURE TYPE: CGMP

DOWNSTREAM STRUCTURE

TOWN: South Burlington DISTANCE: 1000'
HIGHWAY # : Ped Trail STRUCTURE #: NA
CLEAR SPAN: CLEAR HEIGHT:
YEAR BUILT: FULL WATERWAY:
STRUCTURE TYPE: Pedestrian Bridge

PROPOSED STRUCTURE

STRUCTURE TYPE: Precast Concrete Box

CLEAR SPAN(NORMAL TO STREAM): 13.0'
VERTICAL CLEARANCE ABOVE STREAMBED: 5.6'
WATERWAY OF FULL OPENING: 72.8 sq. ft.

WATER SURFACE ELEVATIONS AT:

	UPSTREAM END OF 63-1S		DOWNSTREAM END OF 63-1N
Q2.33 =	332.1'	VELOCITY=	3.6 fps
Q10 =	332.8'	"	5.0 fps
Q25 =	333.1'	"	5.8 fps
Q50 =	333.4'	"	6.3 fps
Q100 =	333.7'	"	6.7 fps

IS THE ROADWAY OVERTOPPED BELOW Q100: No
FREQUENCY: Above Q500
RELIEF ELEVATION: 341.6'
DISCHARGE OVER ROAD @Q100: None

AVERAGE LOW ELEVATION OF SUPERSTRUCTURE:
VERTICAL CLEARANCE: @ Q50 =

SCOUR: Not Applicable for Closed Bottom Structure

REQUIRED CHANNEL PROTECTION: Stone Fill, Type II

PERMIT INFORMATION

		DEPTH OR ELEVATION:
AVERAGE DAILY FLOW:	2 cfs	
ORDINARY LOW WATER:	1 cfs	Depth = 0.3'
ORDINARY HIGH WATER:	25 cfs	Depth = 0.9'

TEMPORARY BRIDGE REQUIREMENTS

STRUCTURE TYPE: Not required - Structure being replaced adjacent to existing
CLEAR SPAN (NORMAL TO STREAM):
VERTICAL CLEARANCE ABOVE STREAMBED:
WATERWAY AREA OF FULL OPENING:

ADDITIONAL INFORMATION

TRAFFIC MAINTENANCE NOTES

1. MAINTAIN TRAFFIC ON AN OFF SITE DETOUR.
2. TRAFFIC SIGNALS ARE NOT NECESSARY.
3. SIDEWALKS ARE NOT NECESSARY

DESIGN VALUES

1. DESIGN LIVE LOAD		HL-93
2. FUTURE PAVEMENT	d_p:	- - -
3. DESIGN SPAN	L:	0.00 FT
4. MIN. MID-SPAN POS. CAMBER @ RELEASE (PRESTRESSED UNITS)	Δ:	- - -
5. PRESTRESSING STRAND	f_y:	- - -
6. PRESTRESSED CONCRETE STRENGTH	f'_c:	- - -
7. PRESTRESSED CONCRETE RELEASE STRENGTH	f'_{ci}:	- - -
8. CONCRETE, HIGH PERFORMANCE CLASS AA	f'_c:	4.0 KSI
9. CONCRETE, HIGH PERFORMANCE CLASS A	f'_c:	4.0 KSI
10. CONCRETE, HIGH PERFORMANCE CLASS B	f'_c:	3.5 KSI
11. CONCRETE, CLASS C	f'_c:	3.0 KSI
12. REINFORCING STEEL	f_y:	60 KSI
13. STRUCTURAL STEEL AASHTO M270	f_y:	- - -
14. NOMINAL BEARING RESISTANCE OF SOIL	q_n:	4.0 KSF
15. SOIL BEARING RESISTANCE FACTOR (REFER TO AASHTO LRFD)	ϕ:	- - -
16. NOMINAL BEARING RESISTANCE OF ROCK	q_n:	- - -
17. ROCK BEARING RESISTANCE FACTOR (REFER TO AASHTO LRFD)	ϕ:	- - -
18. PILE RESISTANCE FACTOR	ϕ:	- - -
19. LATERAL PILE DEFLECTION	Δ:	- - -
20. BASIC WIND SPEED	V_{3s}:	- - -
21. MINIMUM GROUND SNOW LOAD	p_g:	- - -
22. SEISMIC DATA PGA: 0	S_s:	- - -
	S_1:	- - -
23.		
24.		- - -
25.		- - -
26.		- - -

LRFR LOAD RATING FACTORS

LOADING LEVELS	TRUCK						
	H-20	HL-93	3S2	6 AXLE	3A. STR.	4A. STR.	5A. SEMI
TONNAGE	20	36	36	66	30	34.5	38
INVENTORY							
POSTING							
OPERATING							
COMMENTS:							

AS BUILT "REBAR" DETAIL

LEVEL I	LEVEL II	LEVEL III
TYPE:	TYPE:	TYPE:
GRADE:	GRADE:	GRADE:

TRAFFIC DATA

YEAR	ADT	DHV	% D	% T	ADTT
2014	20100	2700	100	9.3	2600
2024	22500	3000	100	13.5	4200

20 year ESAL for flexible pavement from 2014 to 2024 : 4798000
40 year ESAL for flexible pavement from 2014 to 2034 : 12002000
Design Speed : 70 mph

PROJECT NAME: **SOUTH BURLINGTON**
PROJECT NUMBER: **IM CULV(24)**

FILE NAME: 63 pi.xls
PROJECT LEADER: G. BOGUE
DESIGNED BY: G. BOGUE
PRELIMINARY INFORMATION SHEET - 63

PLOT DATE: 5/12/2016
DRAWN BY: J. SOTER
CHECKED BY:

MATERIAL TOLERANCES

SURFACE	
- PAVEMENT (TOTAL THICKNESS)	+/- 1/4"
SUBBASE	+/- 1"
SAND BORROW	+/- 1"

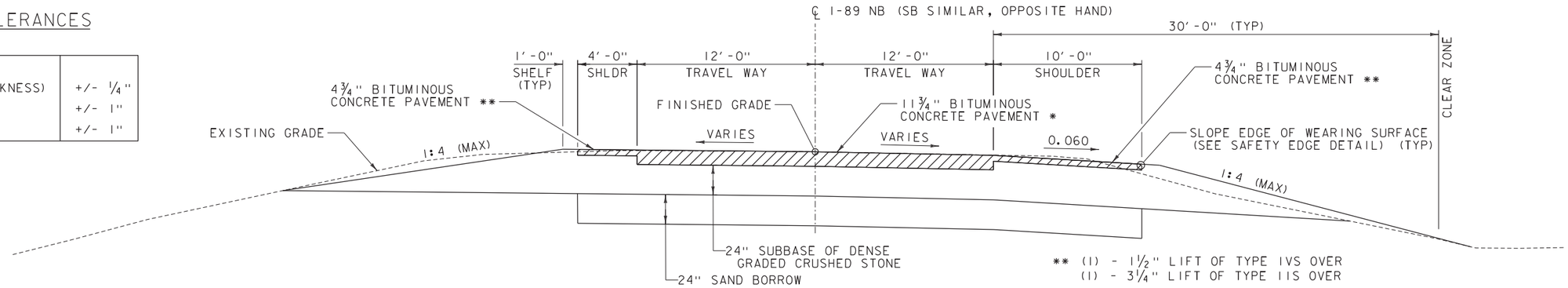

** (1) - 1 1/2" LIFT OF TYPE IVS OVER
(1) - 3 1/4" LIFT OF TYPE IIS OVER

* (1) - 1 1/2" LIFT OF TYPE IVS OVER
(1) - 3 1/4" LIFT OF TYPE IIS OVER
(2) - 3 1/2" OF TYPE IIS

TYPICAL 63-IN&S ROADWAY SECTION

SCALE 1/4" = 1'-0"

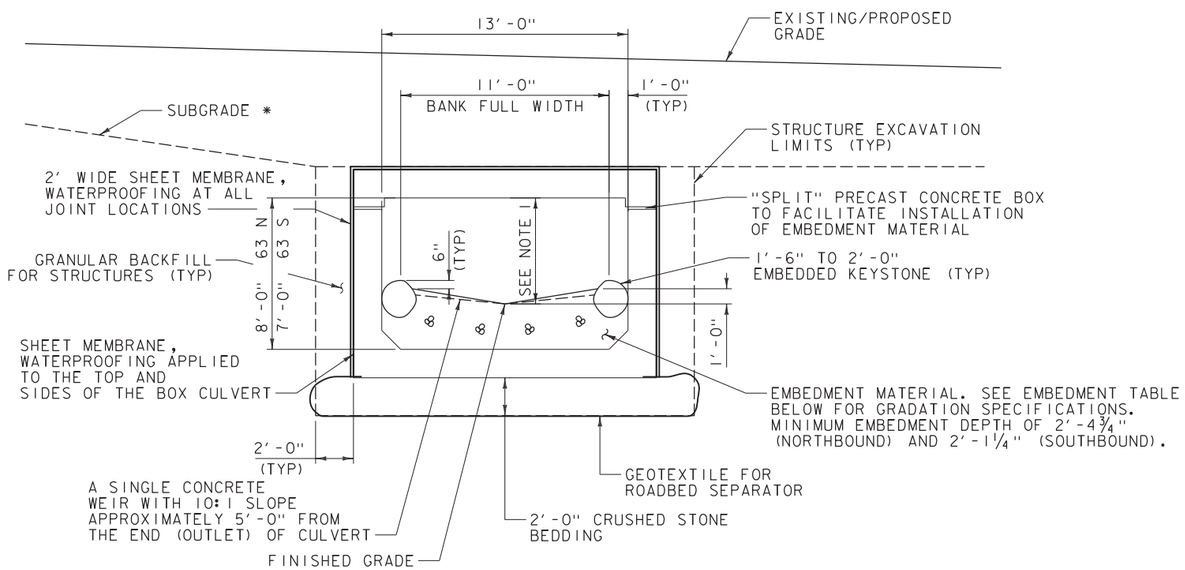

* ROADWAY SUBBASE AND BITUMINOUS NOT SHOWN FOR CLARITY

TYPICAL CULVERT 63-1 SECTION (NORTHBOUND AND SOUTHBOUND)

SCALE 1/4" = 1'-0"

1. HEIGHT SHALL BE 5'-7 1/4" AT CENTER FOR NORTHBOUND CULVERT AND 4'-10 3/4" FOR SOUTHBOUND CULVERT.

EMBEDMENT MATERIAL GRADATION DESIGN TABLE):

D(X) (% PASSING)	63-1 & 64-1 SIEVE GRADATION (INCHES)	METHOD	NOTES
D5	0.01	FULLER-THOMPSON	FINE MATERIAL TO PROHIBIT SUBSURFACE FLOW
D10	0.07		FINE MATERIAL TO PROHIBIT SUBSURFACE FLOW
D16	0.25	FULLER-THOMPSON	FINE MATERIAL TO PROHIBIT SUBSURFACE FLOW
D50	12	USGS METHOD	STABLE COARSE MATERIAL
D100	18	USGS METHOD	IMMOBILE MATERIAL

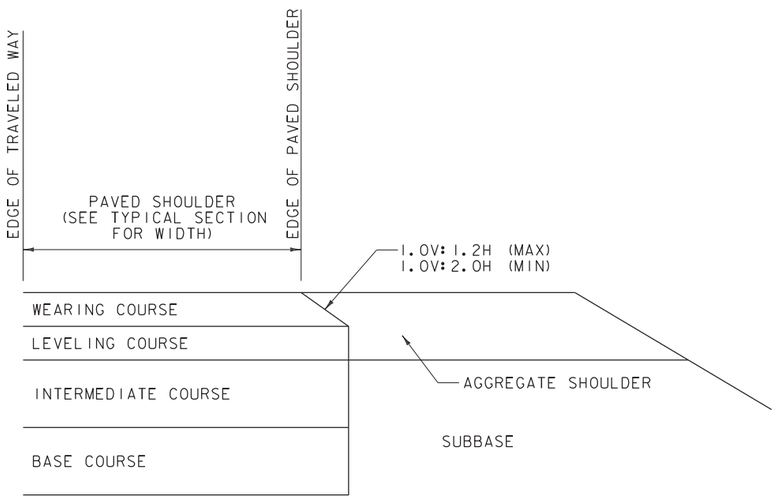

SAFETY EDGE DETAIL FOR PAVING BELOW WEARING COURSE

NOT TO SCALE

1. THIS DETAIL IS INTENDED FOR WHEN PAVING EXTENDS BELOW THE WEARING COURSE.
2. PRIOR TO PLACEMENT OF THE LEVELING AND/OR WEARING COURSE. THE SUBBASE LOCATED BENEATH THE AGGREGATE SHOULDER SHALL BE PREPARED FLUSH WITH THE BOTTOM OF THE LEVELING COURSE.
3. BASE COURSE LIMITS MAY VARY, SEE TYPICALS FOR WIDTH.

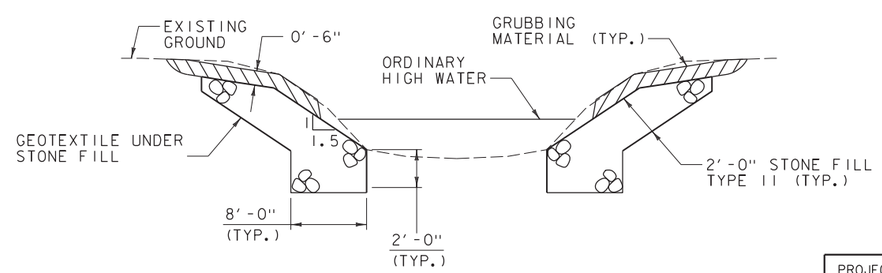

TYPICAL CHANNEL SECTION

(NOT TO SCALE)

Stantec

PROJECT NAME: SOUTH BURLINGTON	
PROJECT NUMBER: IM CULV(24)	
FILE NAME: z11a216typ.dgn	PLOT DATE: 5/19/2016
PROJECT LEADER: G. BOGUE	DRAWN BY: I. MAYNARD
DESIGNED BY: I. MAYNARD	CHECKED BY: T. LUTHER
TYPICAL SECTIONS - 63	SHEET 3 OF 135

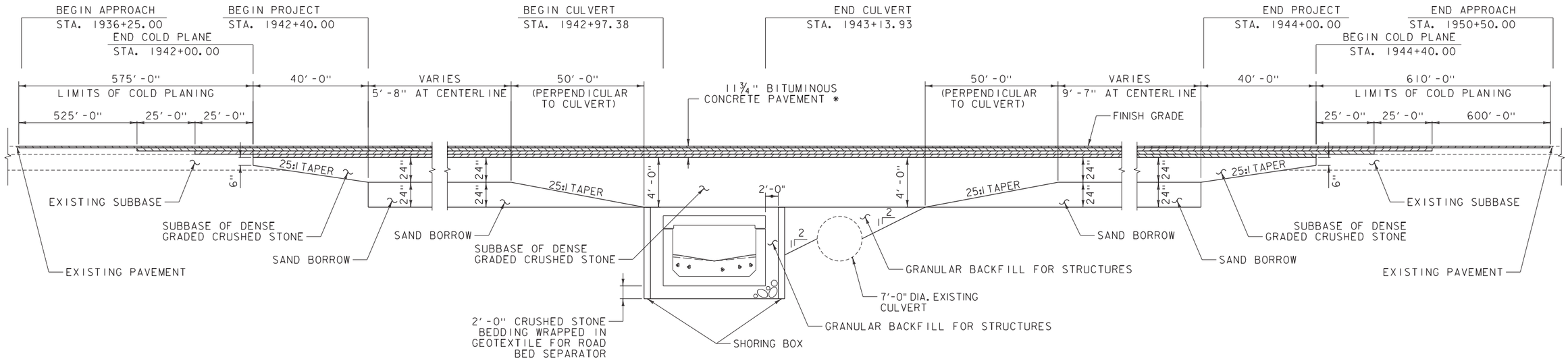

63-IS - TYPICAL CULVERT SECTION

SCALE: ⅛" = 1'-0"

* (1) - 1½" LIFT OF TYPE IVS OVER
(1) - 3¼" LIFT OF TYPE IIS
(2) - 3½" LIFTS OF TYPE IIS

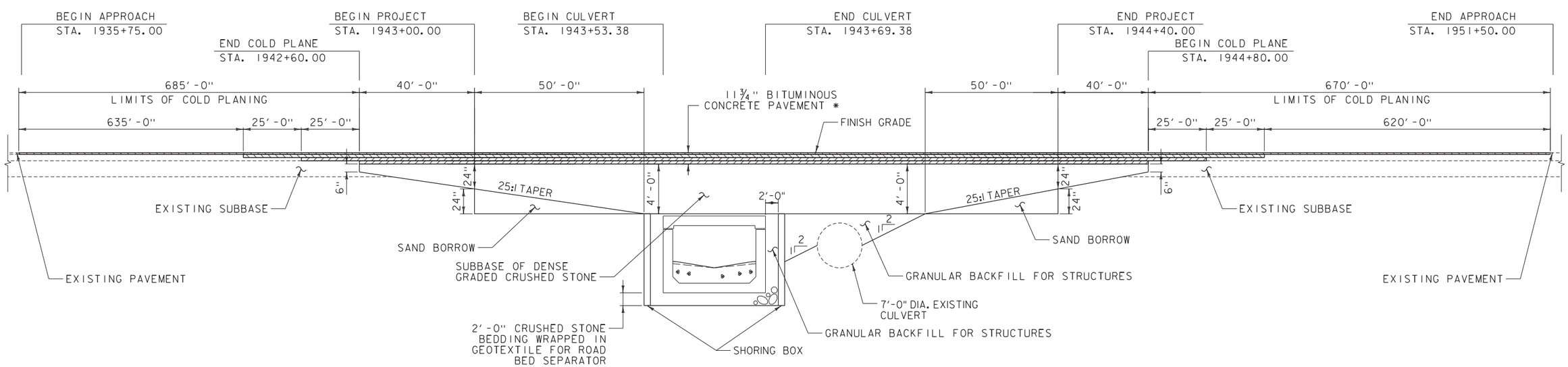

63-IN - TYPICAL CULVERT SECTION

SCALE: ⅛" = 1'-0"

* (1) - 1½" LIFTS OF TYPE IVS OVER
(1) - 3¼" LIFTS OF TYPE IIS
(2) - 3½" LIFTS OF TYPE IIS

NOTE: EMULSIFIED ASPHALT IS TO BE APPLIED AT A RATE OF 0.040 GAL/SY BETWEEN ALL LIFTS OF BITUMINOUS CONCRETE PAVEMENT AND 0.060 GAL/SY ON COLD PLANED SURFACES.

Stantec

PROJECT NAME: SOUTH BURLINGTON	
PROJECT NUMBER: IM CULV(24)	
FILE NAME: zlla216typ.dgn	PLOT DATE: 5/19/2016
PROJECT LEADER: G. BOGUE	DRAWN BY: I. MAYNARD
DESIGNED BY: I. MAYNARD	CHECKED BY: T. LUTHER
APPROACH DETAILS - 63	SHEET 4 OF 135

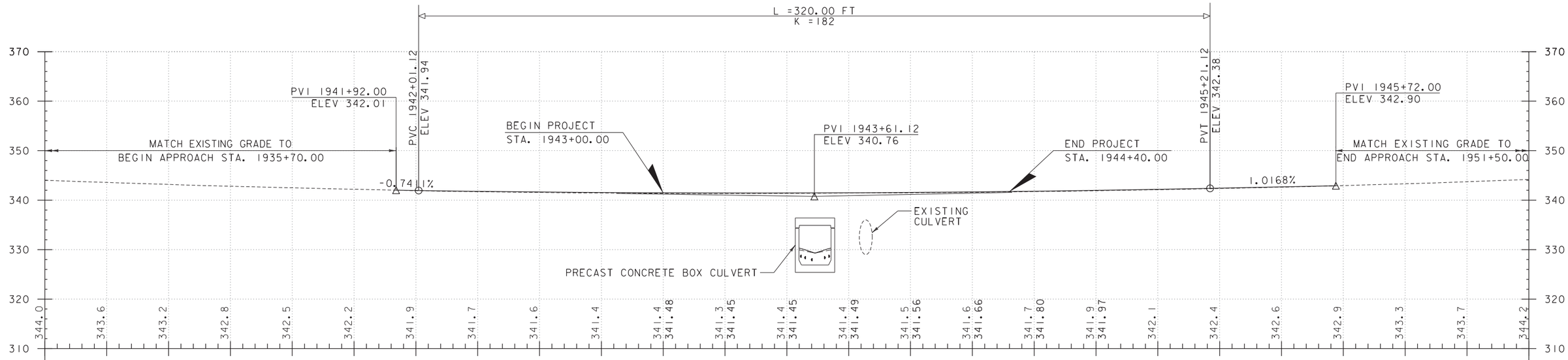

I-89 NORTHBOUND PROFILE AT CULVERT 63

SCALE 1" = 20' HORIZONTAL
1" = 10' VERTICAL

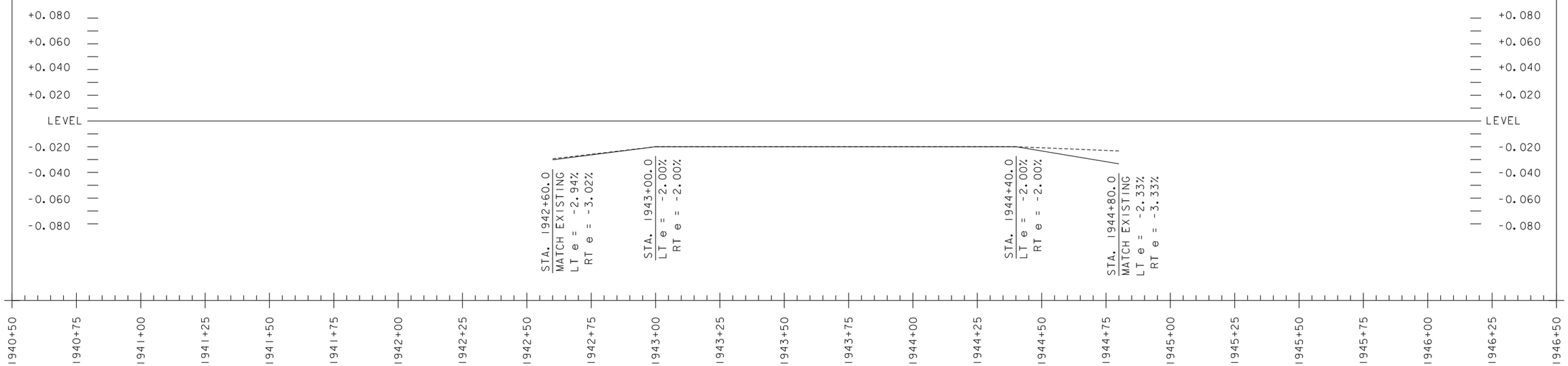

I-89 NORTHBOUND BANKING DIAGRAM AT CULVERT 63

SCALE HORIZONTAL: 1" = 20'
VERTICAL: NTS

NOTE:

GRADES SHOWN TO THE NEAREST
TENTH ARE EXISTING GRADE ALONG ℄

GRADES SHOWN TO THE NEAREST
HUNDREDTH ARE FINISH GRADE ALONG ℄

Stantec

PROJECT NAME: SOUTH BURLINGTON	
PROJECT NUMBER: IM CULV(24)	
FILE NAME: z11a216pro.dgn	PLOT DATE: 5/19/2016
PROJECT LEADER: G. BOGUE	DRAWN BY: I. MAYNARD
DESIGNED BY: I. MAYNARD	CHECKED BY: ------
ROADWAY PROFILES - 63	SHEET 9 OF 135

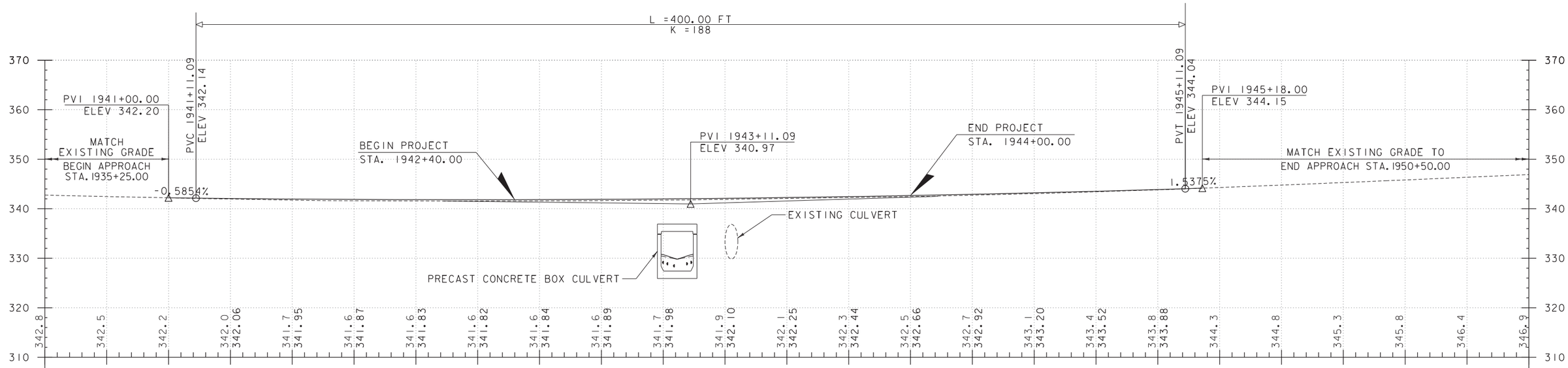

I-89 SOUTHBOUND PROFILE AT CULVERT 63

SCALE 1" = 20' HORIZONTAL
1" = 10' VERTICAL

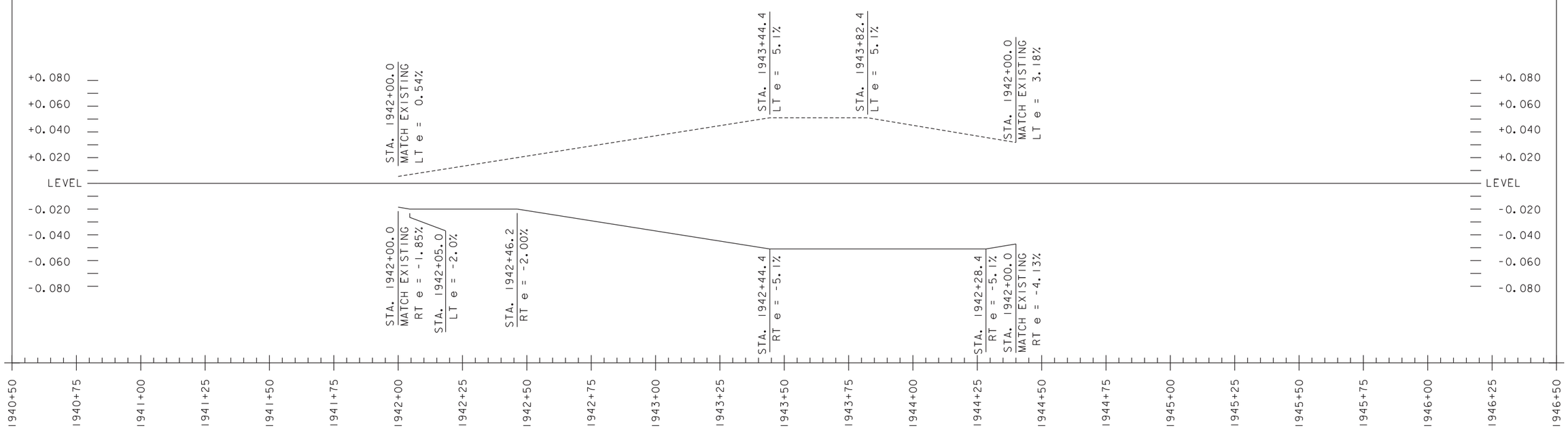

I-89 SOUTHBOUND BANKING DIAGRAM AT CULVERT 63

SCALE HORIZONTAL: 1" = 20'
VERTICAL: NTS

NOTE:

GRADES SHOWN TO THE NEAREST
TENTH ARE EXISTING GRADE ALONG ℄

GRADES SHOWN TO THE NEAREST
HUNDREDTH ARE FINISH GRADE ALONG ℄

Stantec

PROJECT NAME: SOUTH BURLINGTON	
PROJECT NUMBER: IM CULV(24)	
FILE NAME: z11a216pro.dgn	PLOT DATE: 5/19/2016
PROJECT LEADER: G. BOGUE	DRAWN BY: I. MAYNARD
DESIGNED BY: I. MAYNARD	CHECKED BY: ------
ROADWAY PROFILES - 63	SHEET 10 OF 135

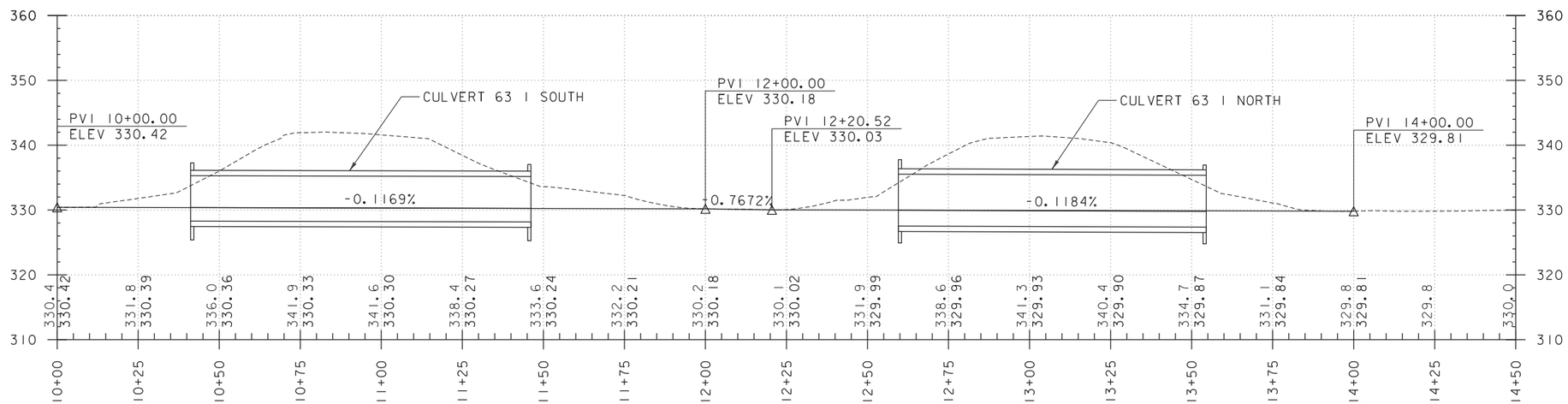

CULVERT 63 CHANNEL PROFILE

Stantec

PROJECT NAME: SOUTH BURLINGTON	
PROJECT NUMBER: IM CULV(24)	
FILE NAME: z11a216pro_ch.dgn	PLOT DATE: 5/19/2016
PROJECT LEADER: G. BOGUE	DRAWN BY: I. MAYNARD
DESIGNED BY: T. KNIGHT	CHECKED BY: ------
CHANNEL PROFILE - 63	SHEET 11 OF 135

PHASE 1

4/11/17 - 5/12/17

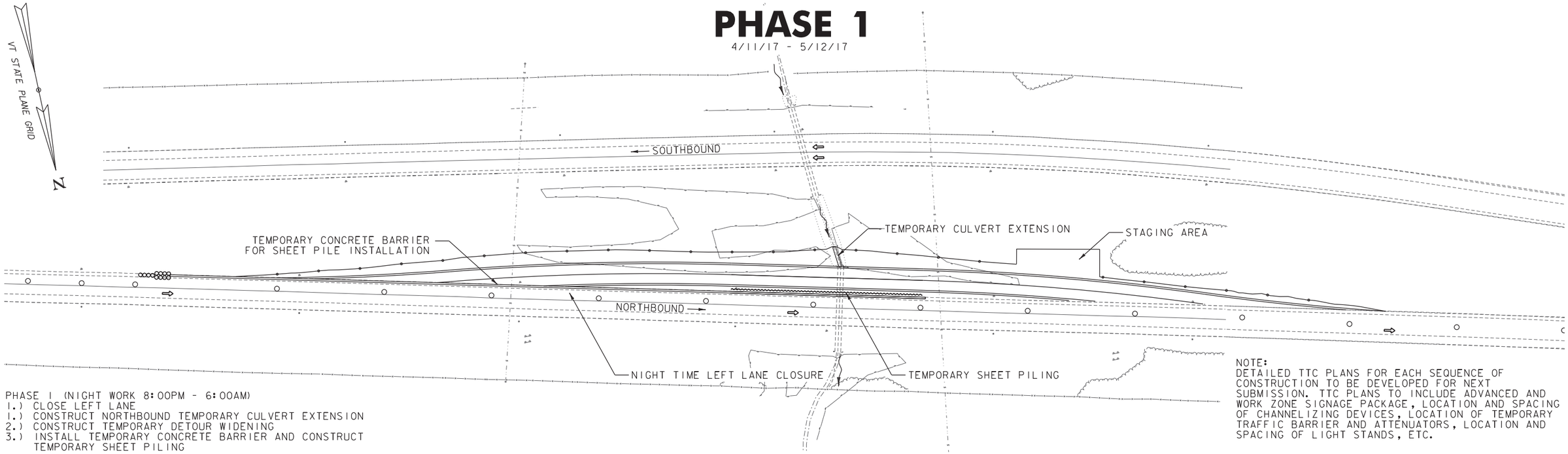

PHASE 1 (NIGHT WORK 8:00PM - 6:00AM)
1.) CLOSE LEFT LANE
1.) CONSTRUCT NORTHBOUND TEMPORARY CULVERT EXTENSION
2.) CONSTRUCT TEMPORARY DETOUR WIDENING
3.) INSTALL TEMPORARY CONCRETE BARRIER AND CONSTRUCT TEMPORARY SHEET PILING

NOTE:
DETAILED TTC PLANS FOR EACH SEQUENCE OF CONSTRUCTION TO BE DEVELOPED FOR NEXT SUBMISSION. TTC PLANS TO INCLUDE ADVANCED AND WORK ZONE SIGNAGE PACKAGE, LOCATION AND SPACING OF CHANNELIZING DEVICES, LOCATION OF TEMPORARY TRAFFIC BARRIER AND ATTENUATORS, LOCATION AND SPACING OF LIGHT STANDS, ETC.

PHASE 2

5/12/17 - 6/16/17

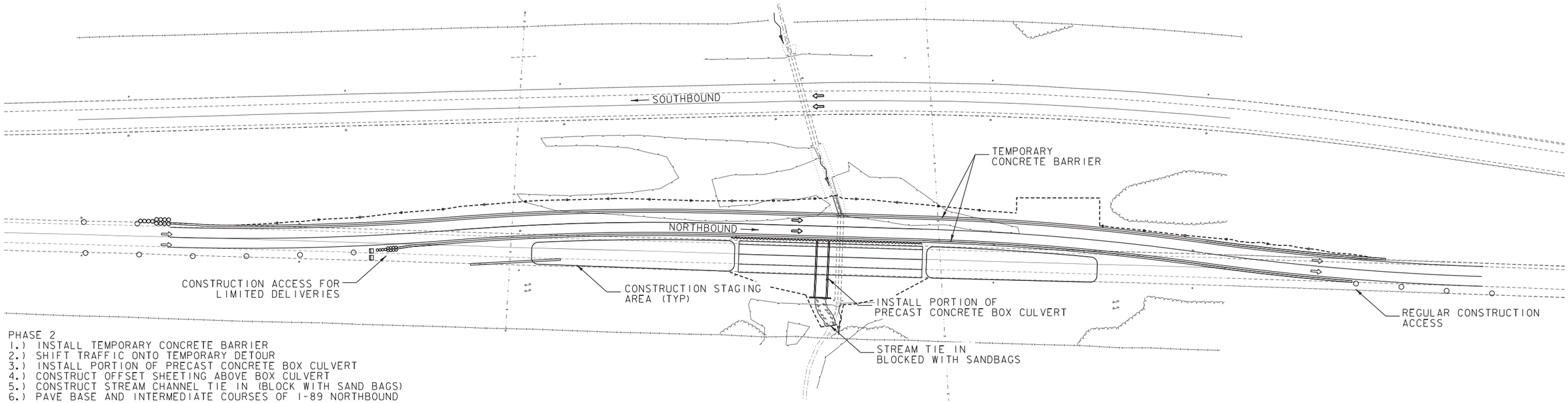

PHASE 2
1.) INSTALL TEMPORARY CONCRETE BARRIER
2.) SHIFT TRAFFIC ONTO TEMPORARY DETOUR
3.) INSTALL PORTION OF PRECAST CONCRETE BOX CULVERT
4.) CONSTRUCT OFFSET SHEETING ABOVE BOX CULVERT
5.) CONSTRUCT STREAM CHANNEL TIE IN (BLOCK WITH SAND BAGS)
6.) PAVE BASE AND INTERMEDIATE COURSES OF I-89 NORTHBOUND

0 60 120
SCALE IN FEET

Stantec

PROJECT NAME: SOUTH BURLINGTON	
PROJECT NUMBER: IM CULV(24)	
FILE NAME: z11a216bdr_phasing.dgn	PLOT DATE: 5/19/2016
PROJECT LEADER: G. BOGUE	DRAWN BY: I. MAYNARD
DESIGNED BY: I. MAYNARD	CHECKED BY: G. EDWARDS
63 - SEQUENCING - PHASES 1 & 2	SHEET 12 OF 135

PHASE 3

6/16/17 - 8/10/17

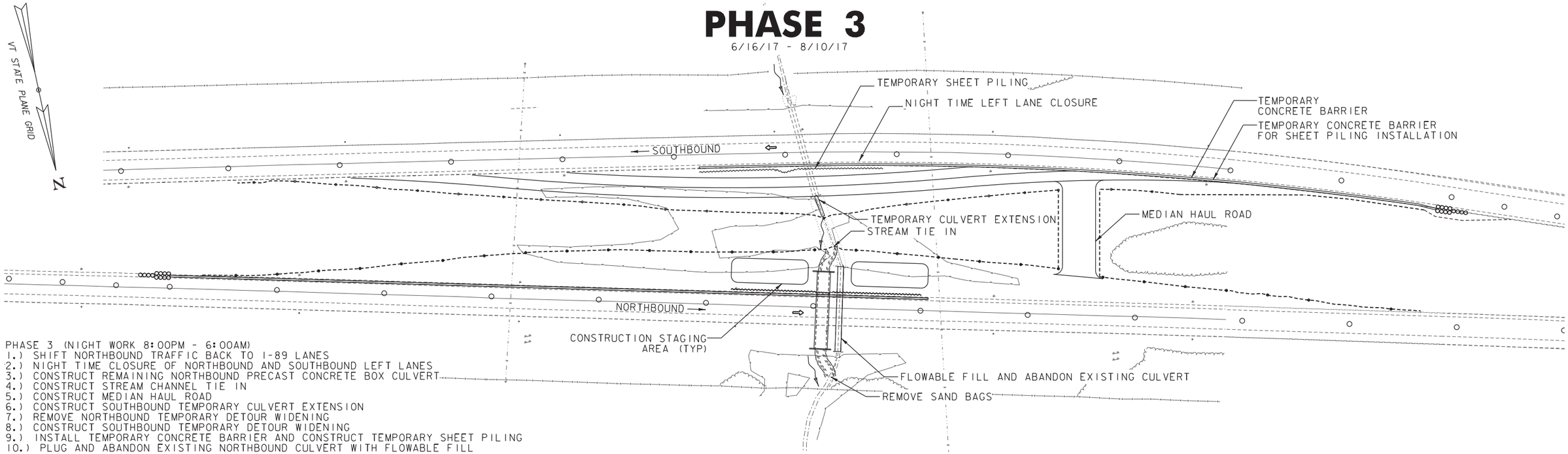

PHASE 3 (NIGHT WORK 8:00PM - 6:00AM)
1.) SHIFT NORTHBOUND TRAFFIC BACK TO I-89 LANES
2.) NIGHT TIME CLOSURE OF NORTHBOUND AND SOUTHBOUND LEFT LANES
3.) CONSTRUCT REMAINING NORTHBOUND PRECAST CONCRETE BOX CULVERT
4.) CONSTRUCT STREAM CHANNEL TIE IN
5.) CONSTRUCT MEDIAN HAUL ROAD
6.) CONSTRUCT SOUTHBOUND TEMPORARY CULVERT EXTENSION
7.) REMOVE NORTHBOUND TEMPORARY DETOUR WIDENING
8.) CONSTRUCT SOUTHBOUND TEMPORARY DETOUR WIDENING
9.) INSTALL TEMPORARY CONCRETE BARRIER AND CONSTRUCT TEMPORARY SHEET PILING
10.) PLUG AND ABANDON EXISTING NORTHBOUND CULVERT WITH FLOWABLE FILL

PHASE 4

8/10/17 - 10/26/17

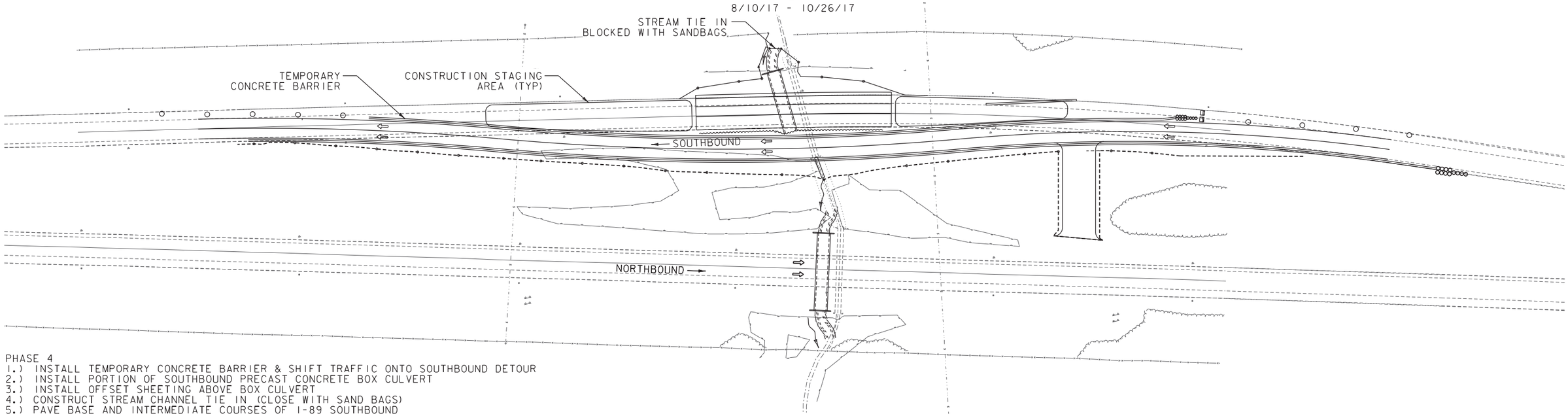

PHASE 4
1.) INSTALL TEMPORARY CONCRETE BARRIER & SHIFT TRAFFIC ONTO SOUTHBOUND DETOUR
2.) INSTALL PORTION OF SOUTHBOUND PRECAST CONCRETE BOX CULVERT
3.) INSTALL OFFSET SHEETING ABOVE BOX CULVERT
4.) CONSTRUCT STREAM CHANNEL TIE IN (CLOSE WITH SAND BAGS)
5.) PAVE BASE AND INTERMEDIATE COURSES OF I-89 SOUTHBOUND

0 60 120
SCALE IN FEET

Stantec

PROJECT NAME: SOUTH BURLINGTON	
PROJECT NUMBER: IM CULV(24)	
FILE NAME: z11a216bdr_phasing.dgn	PLOT DATE: 5/19/2016
PROJECT LEADER: G. BOGUE	DRAWN BY: I. MAYNARD
DESIGNED BY: I. MAYNARD	CHECKED BY: G. EDWARDS
63 - SEQUENCING - PHASES 3 & 4	SHEET 13 OF 135

PHASE 5

10/26/17 - 11/1/17

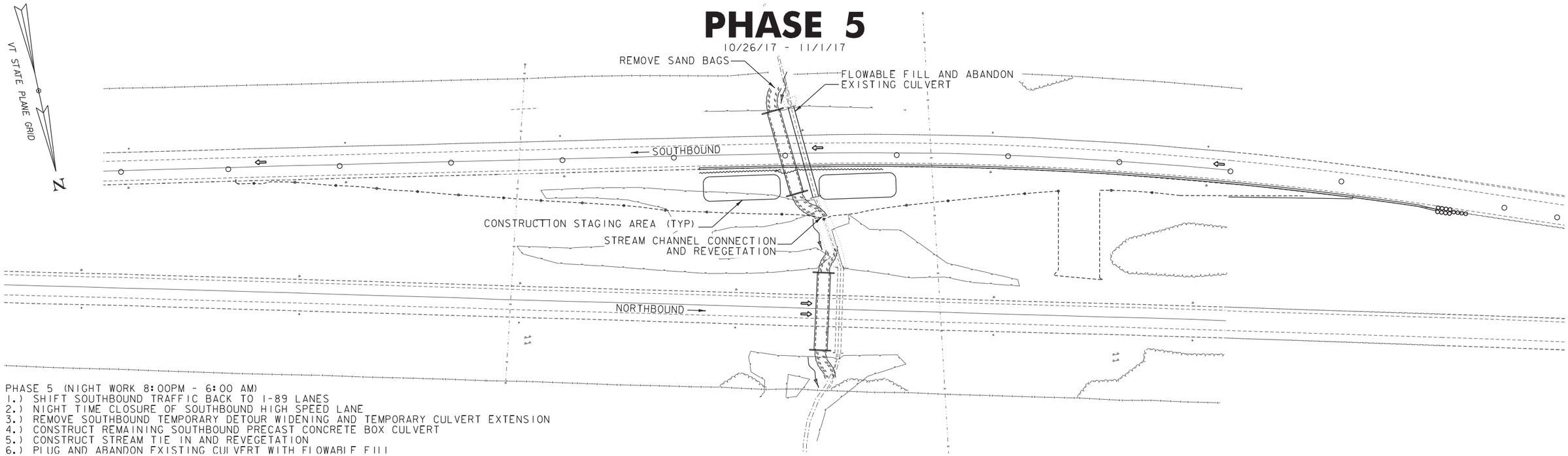

PHASE 5 (NIGHT WORK 8:00PM - 6:00 AM)
1.) SHIFT SOUTHBOUND TRAFFIC BACK TO I-89 LANES
2.) NIGHT TIME CLOSURE OF SOUTHBOUND HIGH SPEED LANE
3.) REMOVE SOUTHBOUND TEMPORARY DETOUR WIDENING AND TEMPORARY CULVERT EXTENSION
4.) CONSTRUCT REMAINING SOUTHBOUND PRECAST CONCRETE BOX CULVERT
5.) CONSTRUCT STREAM TIE IN AND REVEGETATION
6.) PLUG AND ABANDON EXISTING CULVERT WITH FLOWABLE FILL

PHASE 6

11/1/17

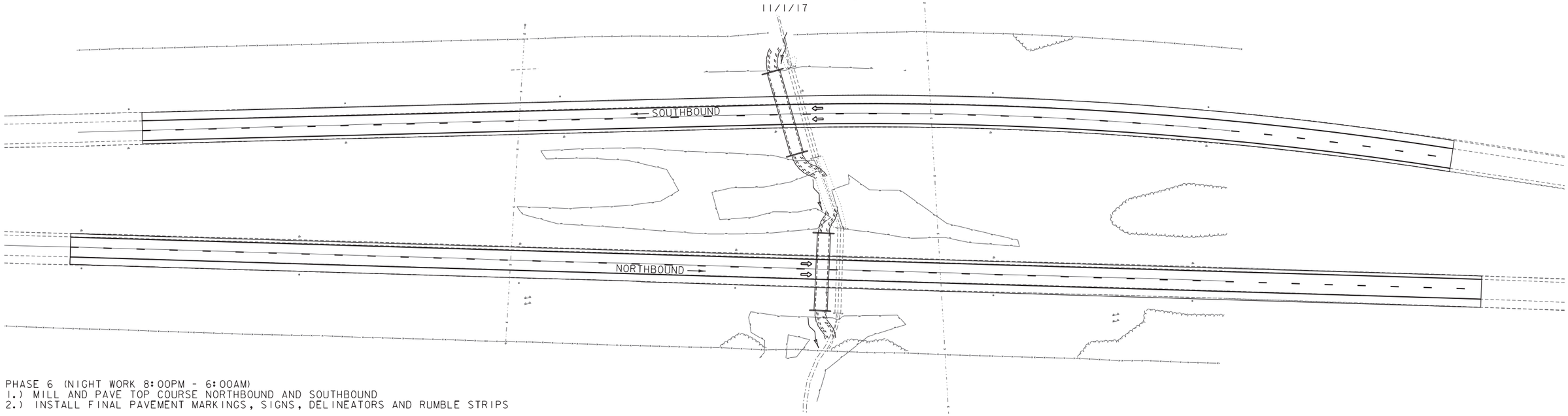

PHASE 6 (NIGHT WORK 8:00PM - 6:00AM)
1.) MILL AND PAVE TOP COURSE NORTHBOUND AND SOUTHBOUND
2.) INSTALL FINAL PAVEMENT MARKINGS, SIGNS, DELINEATORS AND RUMBLE STRIPS

0 60 120
SCALE IN FEET

Stantec

PROJECT NAME: SOUTH BURLINGTON	
PROJECT NUMBER: IM CULV(24)	
FILE NAME: z11a216bdr_phasing.dgn	PLOT DATE: 5/19/2016
PROJECT LEADER: G. BOGUE	DRAWN BY: I. MAYNARD
DESIGNED BY: I. MAYNARD	CHECKED BY: G. EDWARDS
63 - SEQUENCING - PHASES 5 & 6	SHEET 14 OF 135

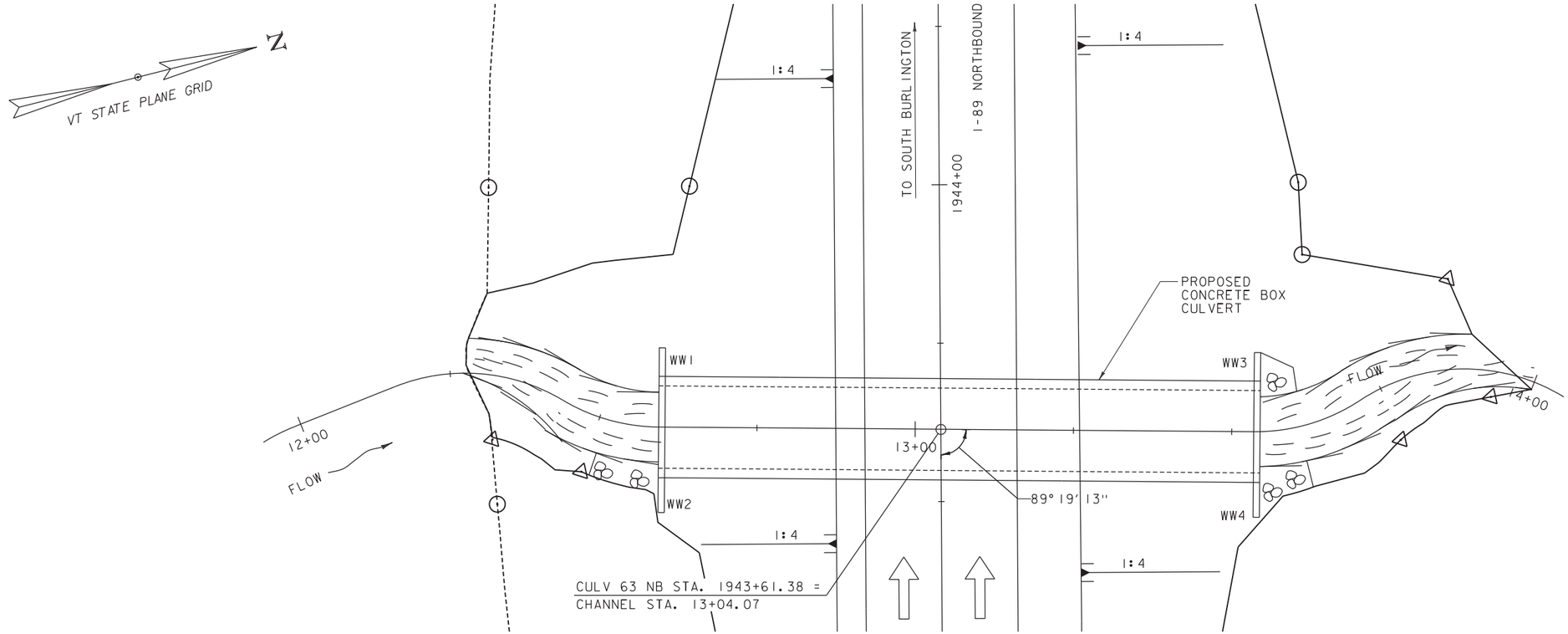

PLAN

SCALE 1" = 10'-0"

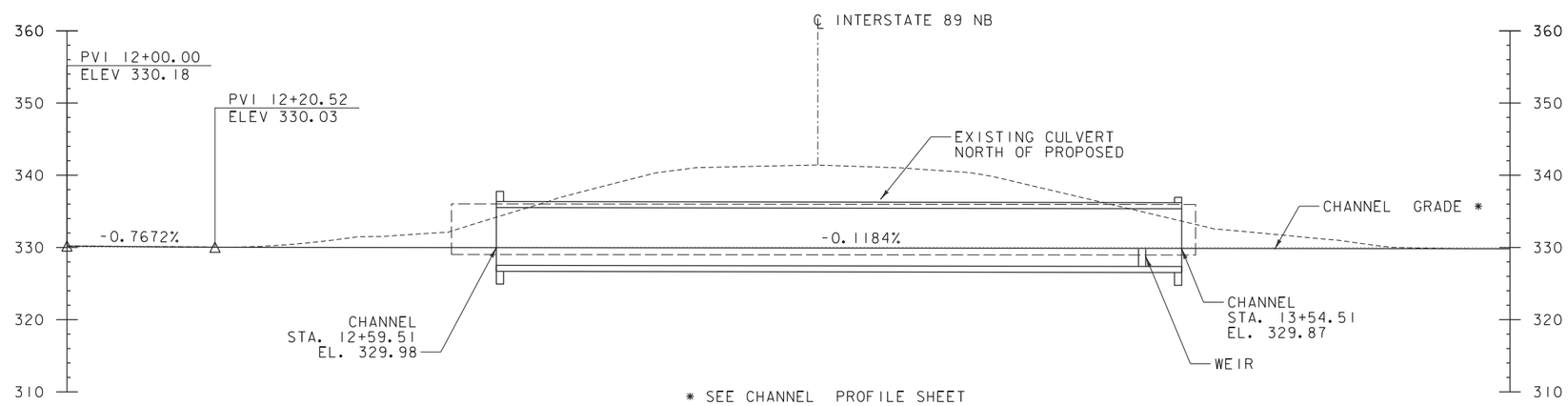

63-IN LONGITUDINAL SECTION ALONG CHANNEL LINE

SCALE 1" = 1'-0"

PROJECT NAME: SOUTH BURLINGTON	
PROJECT NUMBER: IM CULV(24)	
FILE NAME: z11a216bdr_pe.dgn	PLOT DATE: 5/19/2016
PROJECT LEADER: G. BOGUE	DRAWN BY: I. MAYNARD
DESIGNED BY: T. KNIGHT	CHECKED BY: ------
NORTHBOUND PLAN/LONG. SECTION - 63	SHEET 37 OF 135

Stantec

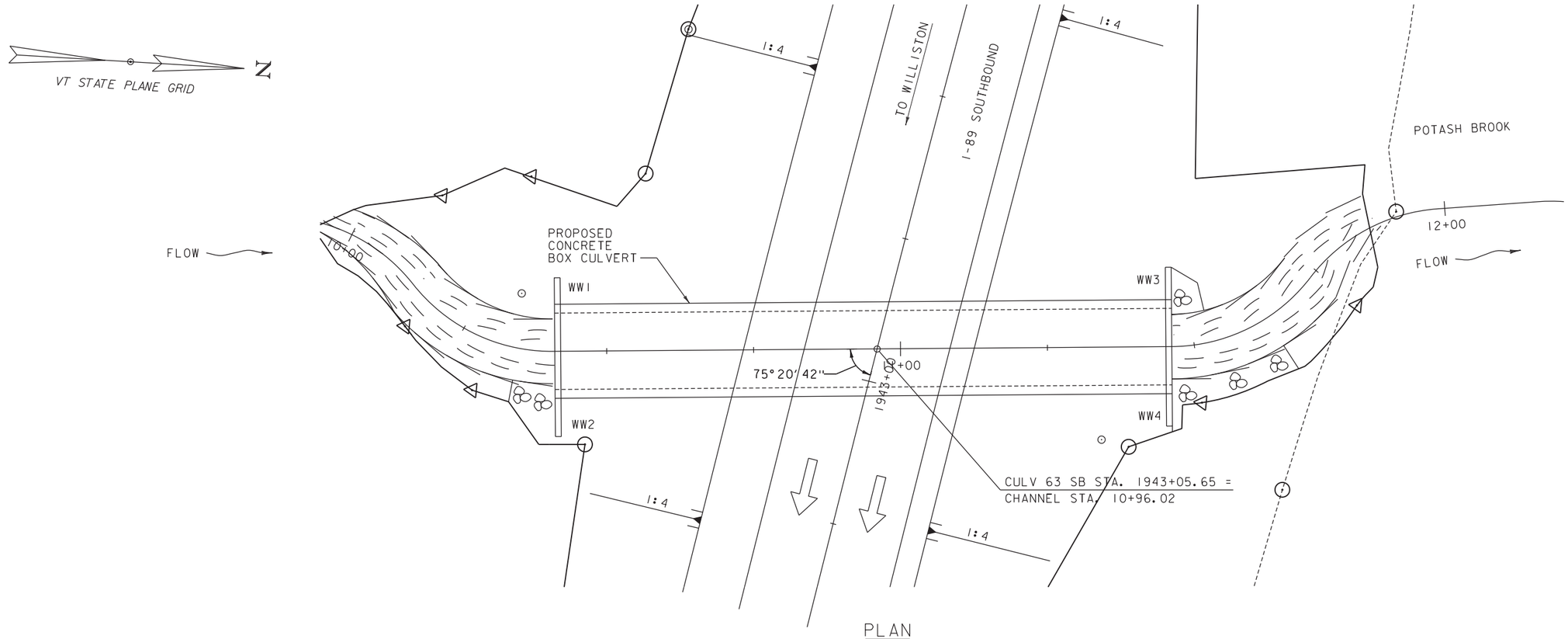

PLAN

SCALE 1" = 10'-0"

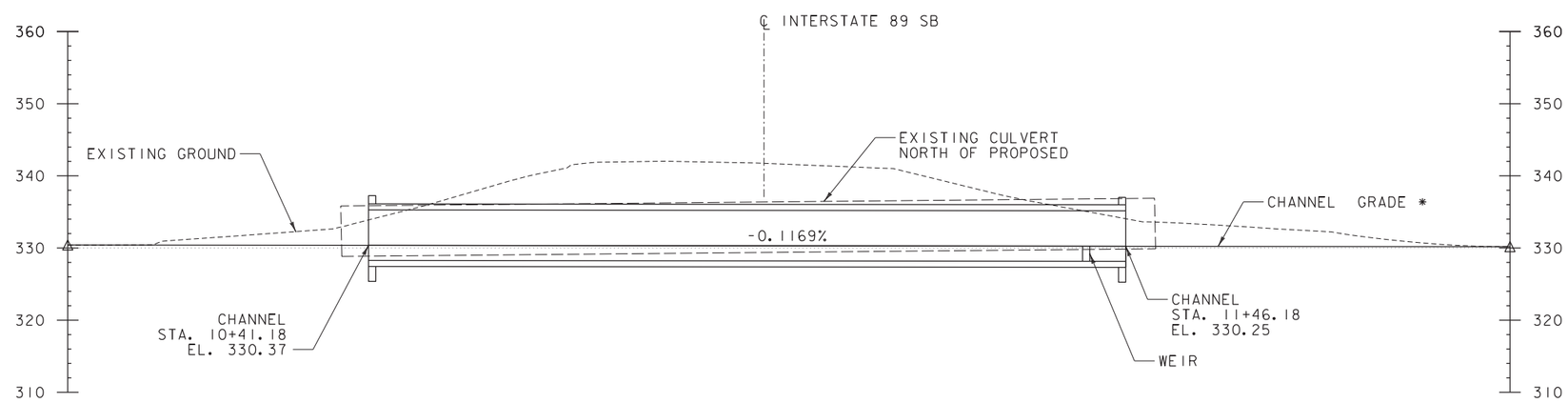

63-IS LONGITUDINAL SECTION ALONG CHANNEL LINE

SCALE 1" = 1'-0"

Stantec

PROJECT NAME: SOUTH BURLINGTON	
PROJECT NUMBER: IM CULV(24)	
FILE NAME: z11a216bdr_pe.dgn	PLOT DATE: 5/19/2016
PROJECT LEADER: G. BOGUE	DRAWN BY: I. MAYNARD
DESIGNED BY: T. KNIGHT	CHECKED BY: ------
SOUTHBOUND PLAN/LONG. SECTION - 63	SHEET 38 OF 135

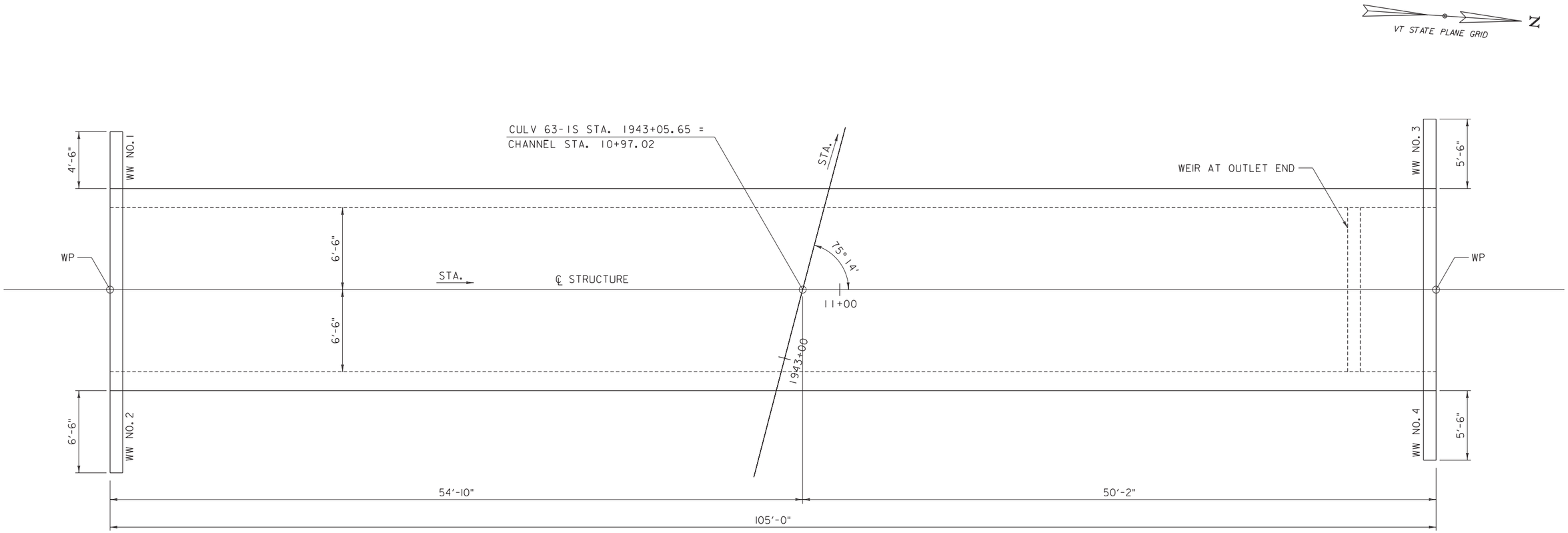

I-63 SOUTHBOUND LAYOUT

SCALE: 1/4" = 1'-0"

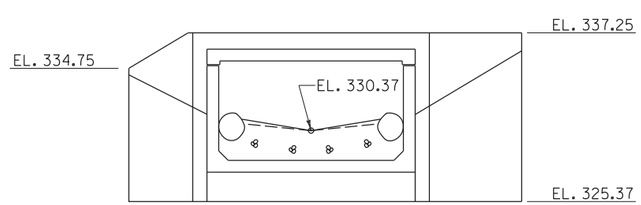

I-63 SOUTHBOUND - INLET ELEVATION

SCALE: 3/16" = 1'-0"

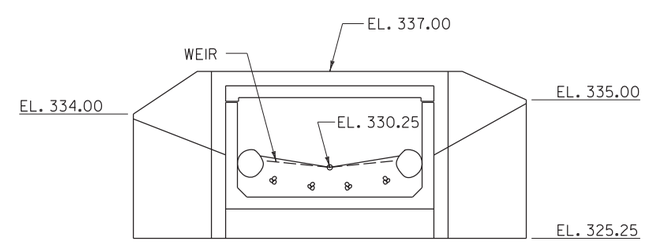

I-63 SOUTHBOUND - OUTLET ELEVATION

SCALE: 3/16" = 1'-0"

Stantec

PROJECT NAME: SOUTH BURLINGTON	
PROJECT NUMBER: IM CULV(24)	
FILE NAME: z11a216layout_63.dgn	PLOT DATE: 5/19/2016
PROJECT LEADER: G. BOGUE	DRAWN BY: J. SOTER
DESIGNED BY: T. KNIGHT	CHECKED BY: ------
STRUCTURE DETAILS - 63 SB	SHEET 39 OF 135

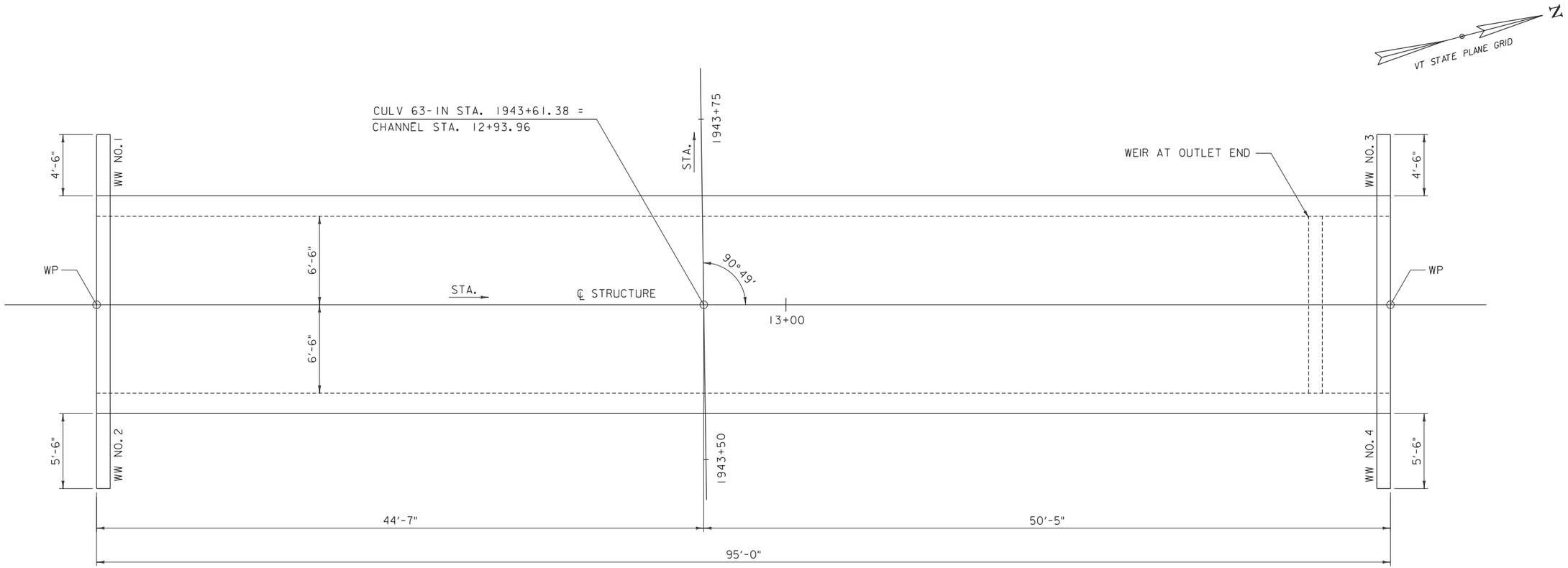

I-63 NORTHBOUND LAYOUT

SCALE: 1/4" = 1'-0"

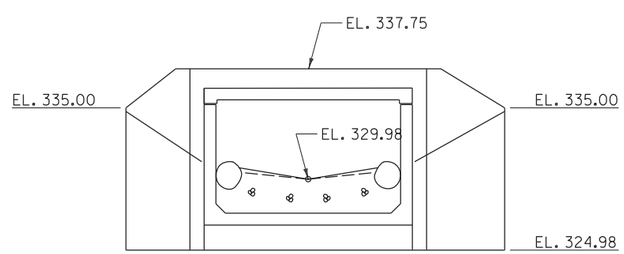

I-63 NORTHBOUND - INLET ELEVATION

SCALE: 3/16" = 1'-0"

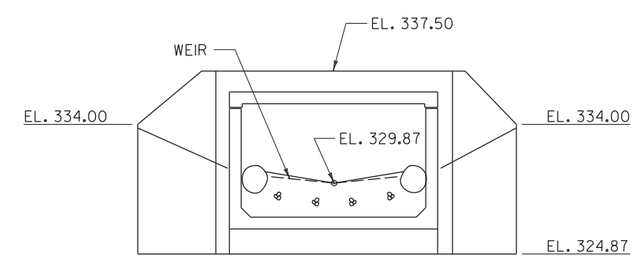

I-63 NORTHBOUND - OUTLET ELEVATION

SCALE: 3/16" = 1'-0"

PROJECT NAME: SOUTH BURLINGTON	
PROJECT NUMBER: IM CULV(24)	
FILE NAME: z11a216layout_63.dgn	PLOT DATE: 5/19/2016
PROJECT LEADER: G. BOGUE	DRAWN BY: J. SOTER
DESIGNED BY: T. KNIGHT	CHECKED BY: -------
STRUCTURE DETAILS - 63 NB	SHEET 40 OF 135

Stantec

STATE OF VERMONT
AGENCY OF TRANSPORTATION

PRELIMINARY INFORMATION SHEET (BRIDGE) - 64-1S & 64-1N

Version
LRFD

INDEX OF SHEETS

PLAN SHEETS

REFER TO SHEET 2 FOR INDEX OF PLAN SHEETS

STRUCTURES DETAIL SHEETS

STANDARDS LIST

E-193	PAVEMENT MARKING DETAILS	08-18-1995
T-1	TRAFFIC CONTROL GENERAL NOTES	08-06-2012
T-11	CONSTRUCTION APPROACH SIGNING DIVIDED HIGHWAY ONE LANE CLOSED	08-06-2012
T-12	TRAFFIC CONTROL DIVIDED HIGHWAY ONE LANE CLOSED	08-06-2012
T-13	TRAFFIC CONTROL DIVIDED HIGHWAY ONE LANE CLOSED	08-06-2012
T-22	TRAFFIC CONTROL FOR PAVEMENT MARKING ON DIVIDED HIGHWAY	08-06-2012
T-28	CONSTRUCTION SIGN DETAILS	08-06-2012
T-29	CONSTRUCTION SIGN DETAILS	08-06-2012
T-30	CONSTRUCTION SIGN DETAILS	08-06-2012
T-31	CONSTRUCTION SIGN DETAILS	08-06-2012
T-35	CONSTRUCTION ZONE LONGITUDNAL DROP-OFFS	08-06-2012
T-36	CONSTRUCTION ZONE LONGITUDNAL DROP-OFFS FOR PAVING	08-06-2012
T-40	DELINEATORS AND MILEPOSTS	01-02-2013
T-43	FREEWAY - EXPRESSWAY DELINEATOR PLACEMENT	04-09-2014
T-45	SQUARE TUBE SIGN POST AND ANCHOR	01-02-2013
T-55	SIGN PLACEMENT EXPRESSWAY AND FREEWAY	10-26-2015

AS BUILT "REBAR" DETAIL

LEVEL I	LEVEL II	LEVEL III
TYPE:	TYPE:	TYPE:
GRADE:	GRADE:	GRADE:

TRAFFIC DATA

YEAR	ADT	DHV	% D	% T	ADTT
2014	20100	2700	100	9.3	2600
2024	22500	3000	100	13.5	4200

20 year ESAL for flexible pavement from 2014 to 2024 : 4798000
40 year ESAL for flexible pavement from 2014 to 2034 : 12002000
Design Speed : 70 mph

FINAL HYDRAULIC REPORT

HYDROLOGIC DATA

Date: July 10, 2015

DRAINAGE AREA : 1.13 sq. mi
CHARACTER OF TERRAIN : Hilly to Flat, Partially wooded
STREAM CHARACTERISTICS : Perennial, sinuous, alluvial with low relief to floodplains
NATURE OF STREAMBED : Sand, Silt

PEAK FLOW DATA

Q 2.33 =	48	Q 50 =	162
Q 10 =	99	Q 100 =	195
Q 25 =	132	Q 500 =	285

DATE OF FLOOD OF RECORD : unknown
ESTIMATED DISCHARGE: unknown
WATER SURFACE ELEV.: unknown
NATURAL STREAM VELOCITY : @ Q50 = 4.7 fps
ICE CONDITIONS : Low
DEBRIS: Low
DOES THE STREAM REACH MAXIMUM HIGHWATER ELEV. RAPIDLY? No
IS ORDINARY RISE RAPID? No
IS STAGE AFFECTED BY UPSTREAM OR DOWNSTREAM CONDITIONS? NO
IF YES, DESCRIBE:

WATERSHED STORAGE: <1%
HEADWATERS:
UNIFORM: X
IMMEDIATELY ABOVE SITE:

EXISTING STRUCTURE INFORMATION

STRUCTURE TYPE: Multiplate Pipe Arch
YEAR BUILT: 1963
CLEAR SPAN(NORMAL TO STREAM): 9.0'
VERTICAL CLEARANCE ABOVE STREAMBED: 6.5'
WATERWAY OF FULL OPENING: 48 sq. ft.
DISPOSITION OF STRUCTURE: Fill and Abandon
TYPE OF MATERIAL UNDER SUBSTRUCTURE: unknown

WATER SURFACE ELEVATIONS AT:

	UPSTREAM END OF 64-1S	VELOCITY =	DOWNSTREAM END OF 64-1N
Q2.33 =	309.6'		2.6 fps
Q10 =	310.4'	"	3.6 fps
Q25 =	310.9'	"	4.2 fps
Q50 =	311.3'	"	4.7 fps
Q100 =	312.7'	"	5.2 fps

LONG TERM STREAMBED CHANGES:

IS THE ROADWAY OVERTOPPED BELOW Q100: No
FREQUENCY: Above Q500
RELIEF ELEVATION: 316.8'
DISCHARGE OVER ROAD @Q100: None

UPSTREAM STRUCTURE

TOWN: None
DISTANCE:
HIGHWAY #
STRUCTURE #:
CLEAR SPAN:
CLEAR HEIGHT:
YEAR BUILT:
FULL WATERWAY:
STRUCTURE TYPE:

DOWNSTREAM STRUCTURE

TOWN: South Burlington
DISTANCE: 0.5 mi
HIGHWAY # Dorset Street
STRUCTURE #:
CLEAR SPAN:
CLEAR HEIGHT:
YEAR BUILT:
FULL WATERWAY:
STRUCTURE TYPE:

LRFR LOAD RATING FACTORS

LOADING LEVELS	TRUCK						
	H-20	HL-93	3S2	6 AXLE	3A. STR.	4A. STR.	5A. SEMI
TONNAGE	20	36	36	66	30	34.5	38
INVENTORY							
POSTING							
OPERATING							
COMMENTS:							

PROPOSED STRUCTURE

STRUCTURE TYPE: Precast Concrete Box

CLEAR SPAN(NORMAL TO STREAM): 16.0'
VERTICAL CLEARANCE ABOVE STREAMBED: 4.9'
WATERWAY OF FULL OPENING: 78.4 sq. ft.

WATER SURFACE ELEVATIONS AT:

	UPSTREAM END OF 64-1S	VELOCITY=	DOWNSTREAM END OF 64-1N
Q2.33 =	308.6'		2.6 fps
Q10 =	309.2'	"	3.6 fps
Q25 =	309.6'	"	4.2 fps
Q50 =	309.9'	"	4.7 fps
Q100 =	310.2'	"	5.2 fps

IS THE ROADWAY OVERTOPPED BELOW Q100: No
FREQUENCY: Above Q500
RELIEF ELEVATION: 318.8'
DISCHARGE OVER ROAD @Q100: None

AVERAGE LOW ELEVATION OF SUPERSTRUCTURE:
VERTICAL CLEARANCE: @ Q50 =

SCOUR: Not Applicable for Closed Bottom Structure

REQUIRED CHANNEL PROTECTION: Stone Fill, Type II

PERMIT INFORMATION

AVERAGE DAILY FLOW:	2 cfs	DEPTH OR ELEVATION:
ORDINARY LOW WATER:	1 cfs	Depth = 0.3'
ORDINARY HIGH WATER:	40 cfs	Depth = 1.3'

TEMPORARY BRIDGE REQUIREMENTS

STRUCTURE TYPE: Not required - Structure being replaced adjacent to existing
CLEAR SPAN (NORMAL TO STREAM):
VERTICAL CLEARANCE ABOVE STREAMBED:
WATERWAY AREA OF FULL OPENING:

ADDITIONAL INFORMATION

TRAFFIC MAINTENANCE NOTES

1. MAINTAIN TRAFFIC ON AN OFF SITE DETOUR.
2. TRAFFIC SIGNALS ARE NOT NECESSARY.
3. SIDEWALKS ARE NOT NECESSARY

DESIGN VALUES

1. DESIGN LIVE LOAD		HL-93
2. FUTURE PAVEMENT	d_p:	- - -
3. DESIGN SPAN	L:	0.00 FT
4. MIN. MID-SPAN POS. CAMBER @ RELEASE (PRESTRESSED UNITS)	Δ:	- - -
5. PRESTRESSING STRAND	f_y:	- - -
6. PRESTRESSED CONCRETE STRENGTH	f'_c:	- - -
7. PRESTRESSED CONCRETE RELEASE STRENGTH	f'_{ci}:	- - -
8. CONCRETE, HIGH PERFORMANCE CLASS AA	f'_c:	4.0 KSI
9. CONCRETE, HIGH PERFORMANCE CLASS A	f'_c:	4.0 KSI
10. CONCRETE, HIGH PERFORMANCE CLASS B	f'_c:	3.5 KSI
11. CONCRETE, CLASS C	f'_c:	3.0 KSI
12. REINFORCING STEEL	f_y:	60 KSI
13. STRUCTURAL STEEL AASHTO M270	f_y:	- - -
14. NOMINAL BEARING RESISTANCE OF SOIL	q_n:	4.0 KSF
15. SOIL BEARING RESISTANCE FACTOR (REFER TO AASHTO LRFD)	ϕ:	- - -
16. NOMINAL BEARING RESISTANCE OF ROCK	q_n:	- - -
17. ROCK BEARING RESISTANCE FACTOR (REFER TO AASHTO LRFD)	ϕ:	- - -
18. PILE RESISTANCE FACTOR	ϕ:	- - -
19. LATERAL PILE DEFLECTION	Δ:	- - -
20. BASIC WIND SPEED	V_{3s}:	- - -
21. MINIMUM GROUND SNOW LOAD	p_g:	- - -
22. SEISMIC DATA PGA: 0	S_s:	- - -
	S_1:	- - -
23.		
24.		- - -
25.		- - -
26.		- - -

PROJECT NAME: **SOUTH BURLINGTON**
PROJECT NUMBER: **IM CULV(24)**

FILE NAME: 64 pi.xls
PROJECT LEADER: G. BOGUE
DESIGNED BY: G. BOGUE
PRELIMINARY INFORMATION SHEET - 64

PLOT DATE: 3/10/2016
DRAWN BY: J. SOTER
CHECKED BY:

MATERIAL TOLERANCES

SURFACE	
- PAVEMENT (TOTAL THICKNESS)	+/- 1/4"
SUBBASE	+/- 1"
SAND BORROW	+/- 1"

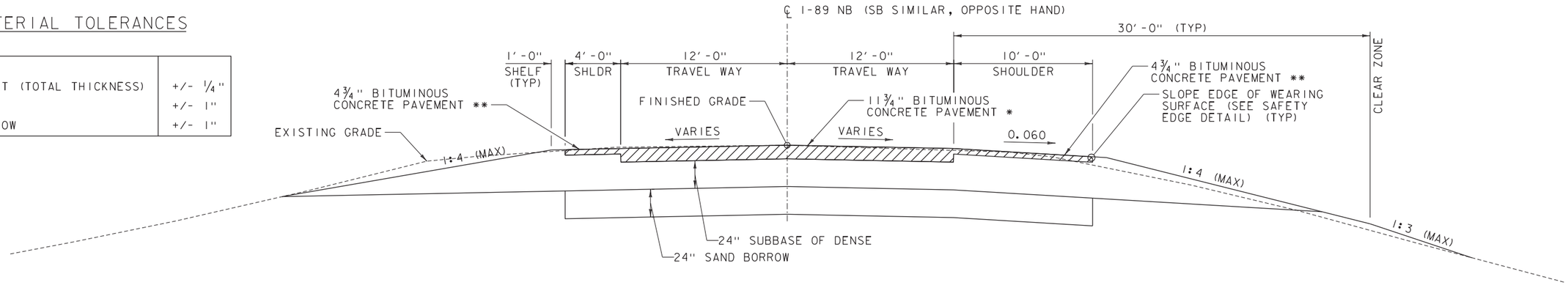

* (1) - 1 1/2" LIFT OF TYPE IVS OVER
(1) - 3 1/4" LIFT OF TYPE IIS OVER
(2) - 3 1/2" OF TYPE IIS

** (1) - 1 1/2" LIFT OF TYPE IVS OVER
(1) - 3 1/4" LIFT OF TYPE IIS OVER

TYPICAL 64-IN&S ROADWAY SECTION

SCALE 1/4" = 1'-0"

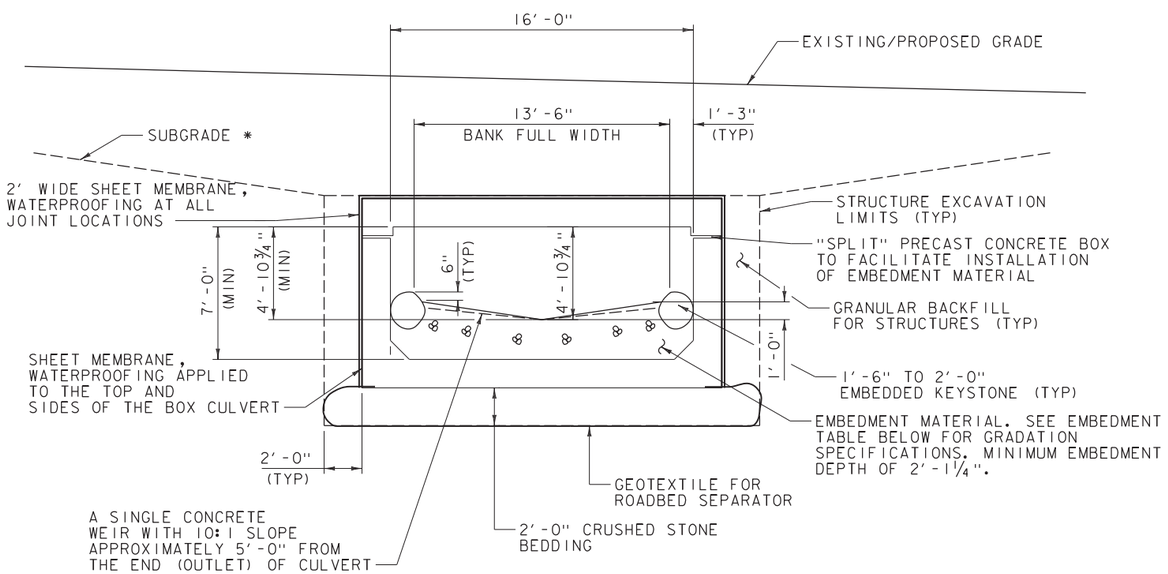

* ROADWAY SUBBASE AND BITUMINOUS NOT SHOWN FOR CLARITY

TYPICAL CULVERT 64-1 SECTION (NORTHBOUND AND SOUTHBOUND)

SCALE 1/4" = 1'-0"

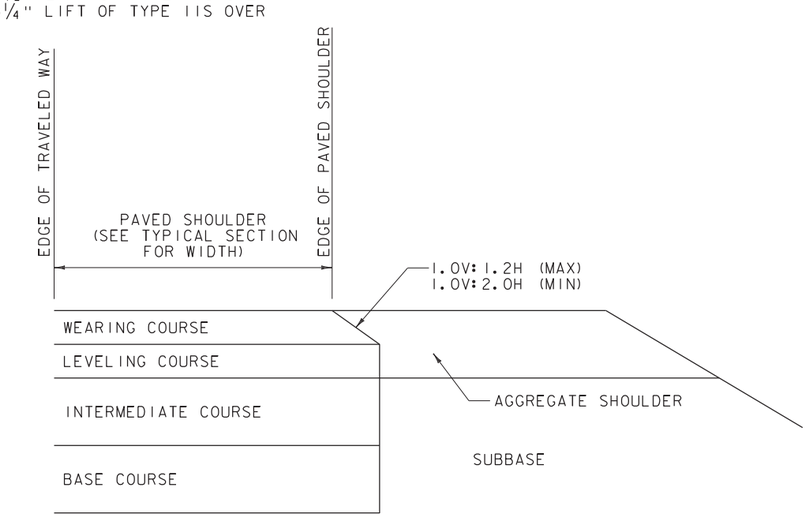

SAFETY EDGE DETAIL FOR PAVING BELOW WEARING COURSE

NOT TO SCALE

1. THIS DETAIL IS INTENDED FOR WHEN PAVING EXTENDS BELOW THE WEARING COURSE.
2. PRIOR TO PLACEMENT OF THE LEVELING AND/OR WEARING COURSE. THE SUBBASE LOCATED BENEATH THE AGGREGATE SHOULDER SHALL BE PREPARED FLUSH WITH THE BOTTOM OF THE LEVELING COURSE.
3. BASE COURSE LIMITS MAY VARY, SEE TYPICALS FOR WIDTH.

EMBEDMENT MATERIAL GRADATION DESIGN TABLE):

D(X) (% PASSING)	63-1& 64-1 SIEVE GRADATION (INCHES)	METHOD	NOTES
D5	0.01	FULLER-THOMPSON	FINE MATERIAL TO PROHIBIT SUBSURFACE FLOW
D10	0.07		FINE MATERIAL TO PROHIBIT SUBSURFACE FLOW
D16	0.25	FULLER-THOMPSON	FINE MATERIAL TO PROHIBIT SUBSURFACE FLOW
D50	12	USGS METHOD	STABLE COARSE MATERIAL
D100	18	USGS METHOD	IMMOBILE MATERIAL

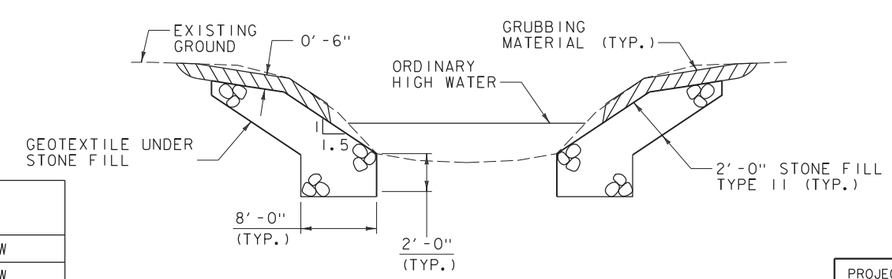

TYPICAL CHANNEL SECTION

(NOT TO SCALE)

Stantec

PROJECT NAME: SOUTH BURLINGTON	
PROJECT NUMBER: IM CULV(24)	
FILE NAME: z11a216typ.dgn	PLOT DATE: 5/19/2016
PROJECT LEADER: G. BOGUE	DRAWN BY: I. MAYNARD
DESIGNED BY: I. MAYNARD	CHECKED BY: T. LUTHER
TYPICAL SECTIONS - 64	SHEET 70 OF 135

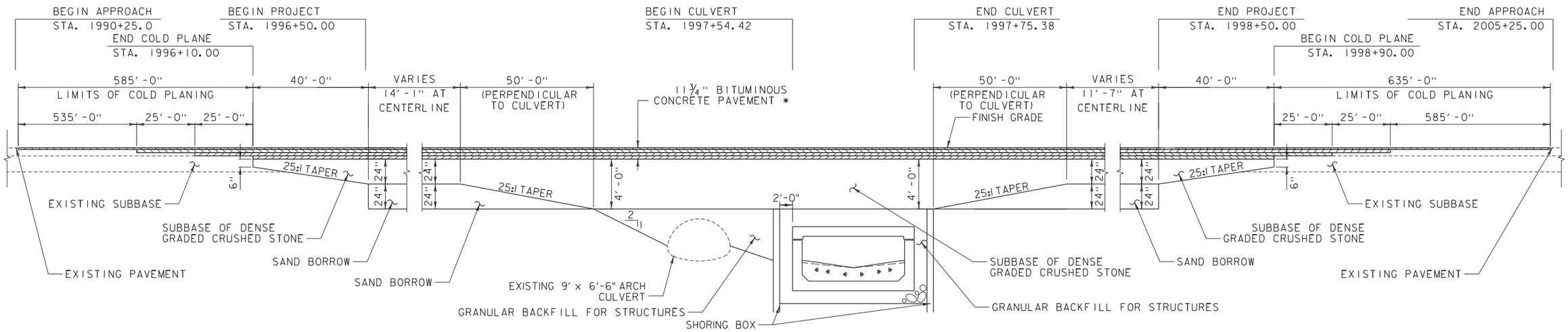

64-IS - TYPICAL CULVERT SECTION

SCALE: ⅛" = 1'-0"

* (1) - 1½" LIFT OF TYPE IVS OVER
(1) - 3¼" LIFT OF TYPE IIS
(2) - 3½" LIFTS OF TYPE IIS

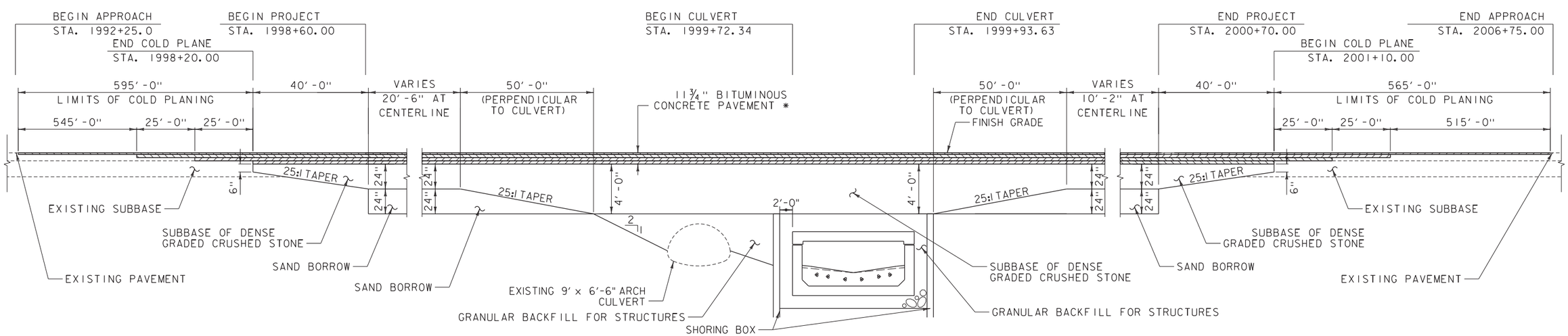

64-IN - TYPICAL CULVERT SECTION

SCALE: ⅛" = 1'-0"

* (1) - 1½" LIFTS OF TYPE IVS OVER
(1) - 3¼" LIFTS OF TYPE IIS
(2) - 3½" LIFTS OF TYPE IIS

Stantec

PROJECT NAME: SOUTH BURLINGTON	
PROJECT NUMBER: IM CULV(24)	
FILE NAME: z11a216typ.dgn	PLOT DATE: 5/19/2016
PROJECT LEADER: G. BOGUE	DRAWN BY: I. MAYNARD
DESIGNED BY: I. MAYNARD	CHECKED BY: T. LUTHER
APPROACH DETAILS - 64	SHEET 71 OF 135

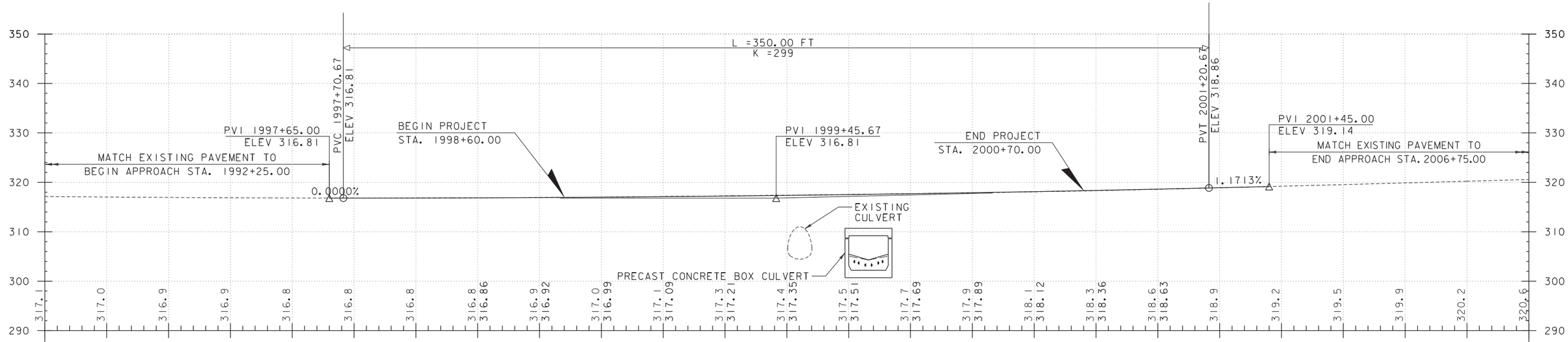

I-89 NORTHBOUND PROFILE AT CULVERT 64

SCALE 1" = 20' HORIZONTAL
1" = 10' VERTICAL

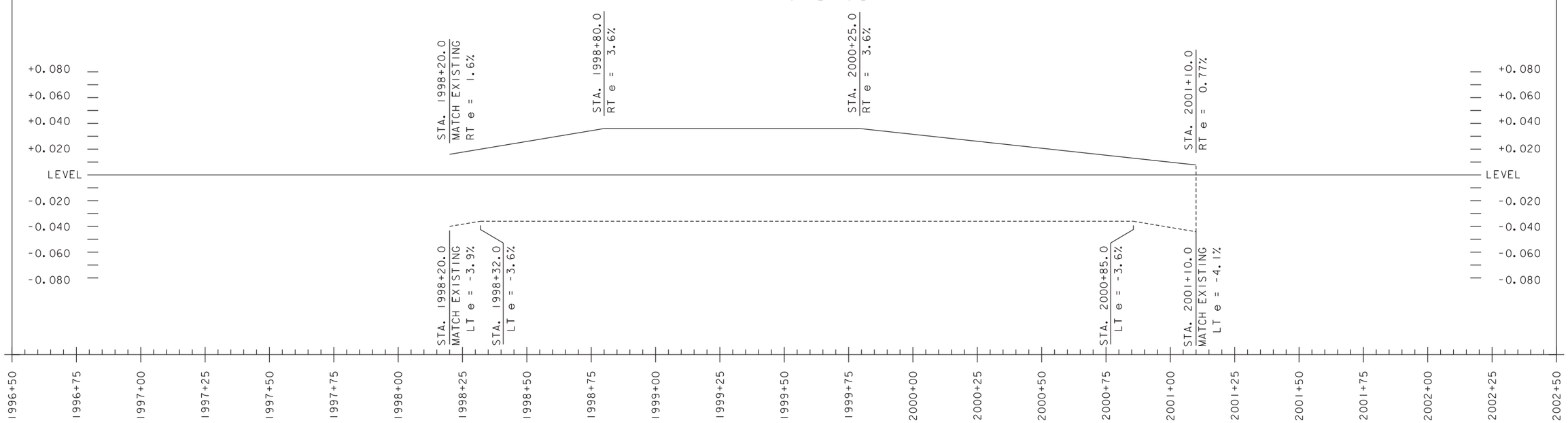

I-89 NORTHBOUND BANKING DIAGRAM AT CULVERT 64

SCALE HORIZONTAL: 1" = 20'
VERTICAL: NTS

NOTE:

GRADES SHOWN TO THE NEAREST
TENTH ARE EXISTING GRADE ALONG ℄

GRADES SHOWN TO THE NEAREST
HUNDREDTH ARE FINISH GRADE ALONG ℄

Stantec

PROJECT NAME: SOUTH BURLINGTON	
PROJECT NUMBER: IM CULV(24)	
FILE NAME: z11a216pro.dgn	PLOT DATE: 5/19/2016
PROJECT LEADER: G. BOGUE	DRAWN BY: I. MAYNARD
DESIGNED BY: I. MAYNARD	CHECKED BY: ------
NORTHBOUND PROFILE - 64	SHEET 75 OF 135

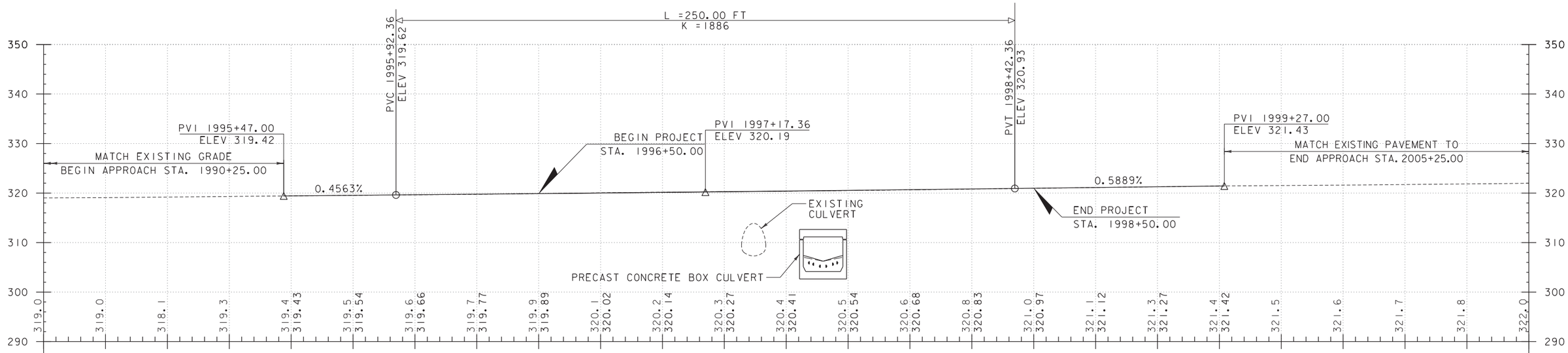

I-89 SOUTHBOUND PROFILE AT CULVERT 64

SCALE 1" = 20' HORIZONTAL
1" = 10' VERTICAL

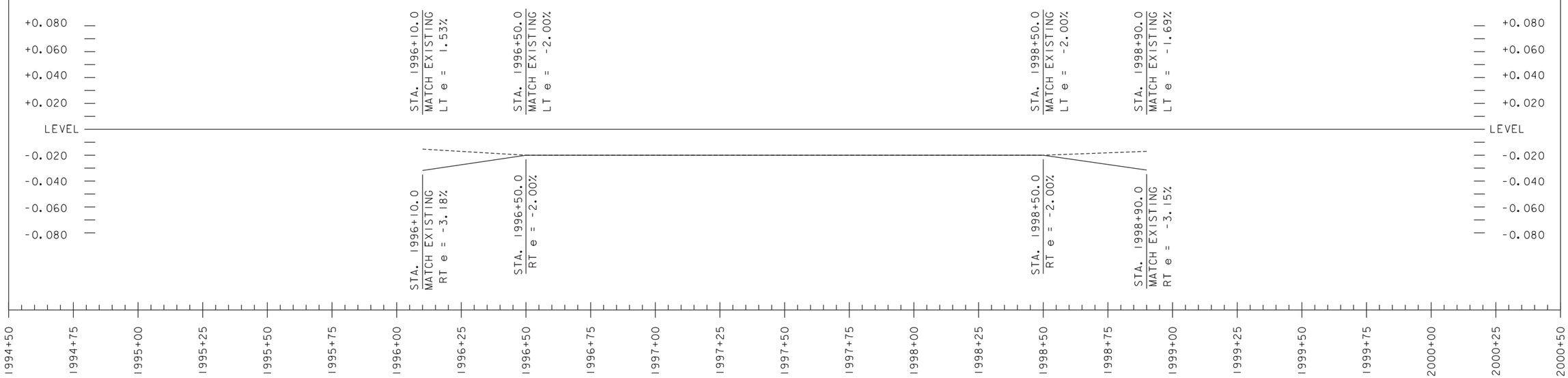

I-89 SOUTHBOUND PROFILE AT CULVERT 64

SCALE 1" = 20' HORIZONTAL
1" = 10' VERTICAL

NOTE:

GRADES SHOWN TO THE NEAREST TENTH ARE EXISTING GRADE ALONG ℄

GRADES SHOWN TO THE NEAREST HUNDREDTH ARE FINISH GRADE ALONG ℄

Stantec

PROJECT NAME: SOUTH BURLINGTON	
PROJECT NUMBER: IM CULV(24)	
FILE NAME: z11a216pro.dgn	PLOT DATE: 5/19/2016
PROJECT LEADER: G. BOGUE	DRAWN BY: I. MAYNARD
DESIGNED BY: I. MAYNARD	CHECKED BY: ------
SOUTHBOUND PROFILE - 64	SHEET 76 OF 135

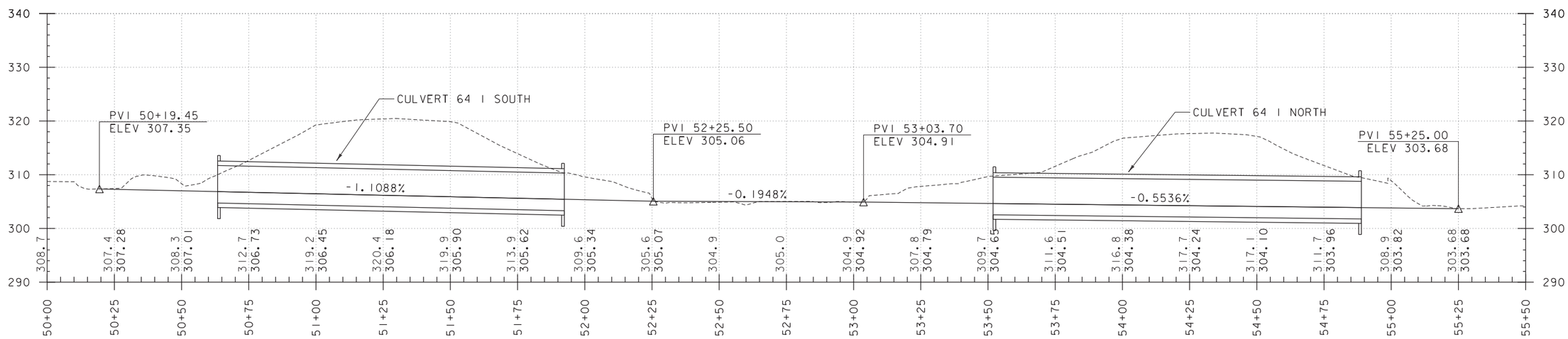

CULVERT 64 CHANNEL PROFILE

Stantec

PROJECT NAME: SOUTH BURLINGTON	
PROJECT NUMBER: IM CULV(24)	
FILE NAME: z11a216pro_ch.dgn	PLOT DATE: 5/19/2016
PROJECT LEADER: G. BOGUE	DRAWN BY: I. MAYNARD
DESIGNED BY: T. KNIGHT	CHECKED BY: ------
CHANNEL PROFILE - 64	SHEET 77 OF 135

PHASE 1

4/11/17 - 5/12/17

PHASE 1 (NIGHT WORK 8:00PM - 6:00AM)
1.) CLOSE LEFT LANE
1.) CONSTRUCT NORTHBOUND TEMPORARY CULVERT EXTENSION
2.) CONSTRUCT TEMPORARY DETOUR WIDENING
3.) INSTALL TEMPORARY CONCRETE BARRIER AND CONSTRUCT TEMPORARY SHEET PILING

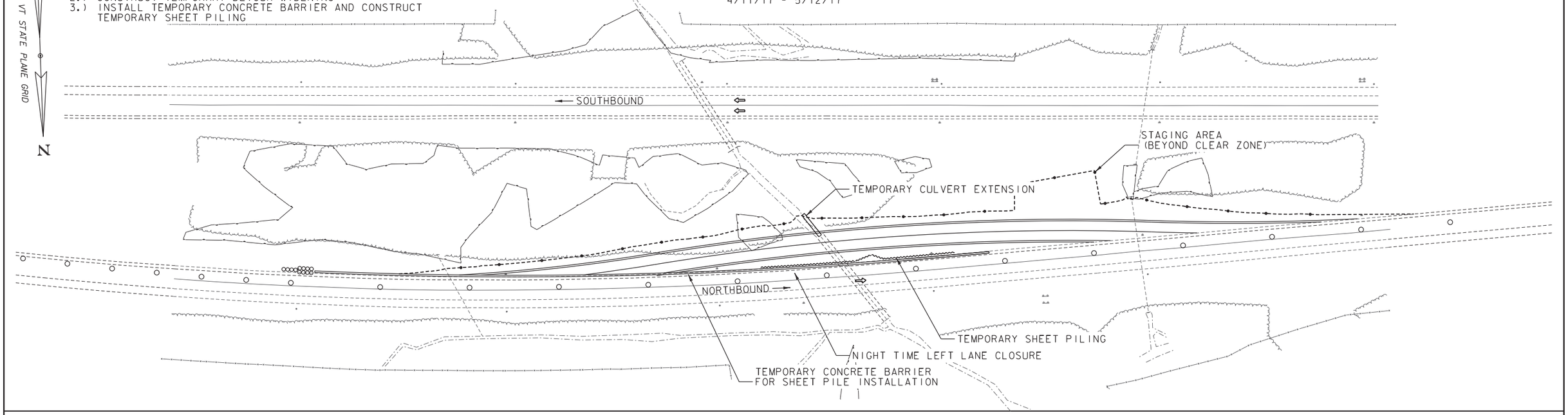

PHASE 2

5/12/17 - 6/16/17

PHASE 2
1.) INSTALL TEMPORARY CONCRETE BARRIER
2.) SHIFT TRAFFIC ONTO TEMPORARY DETOUR
3.) INSTALL PORTION OF PRECAST CONCRETE BOX CULVERT
4.) CONSTRUCT OFFSET SHEETING ABOVE BOX CULVERT
5.) CONSTRUCT STREAM CHANNEL TIE IN (BLOCK WITH SAND BAGS)
6.) PAVE BASE AND INTERMEDIATE COURSES OF I-89 NORTHBOUND

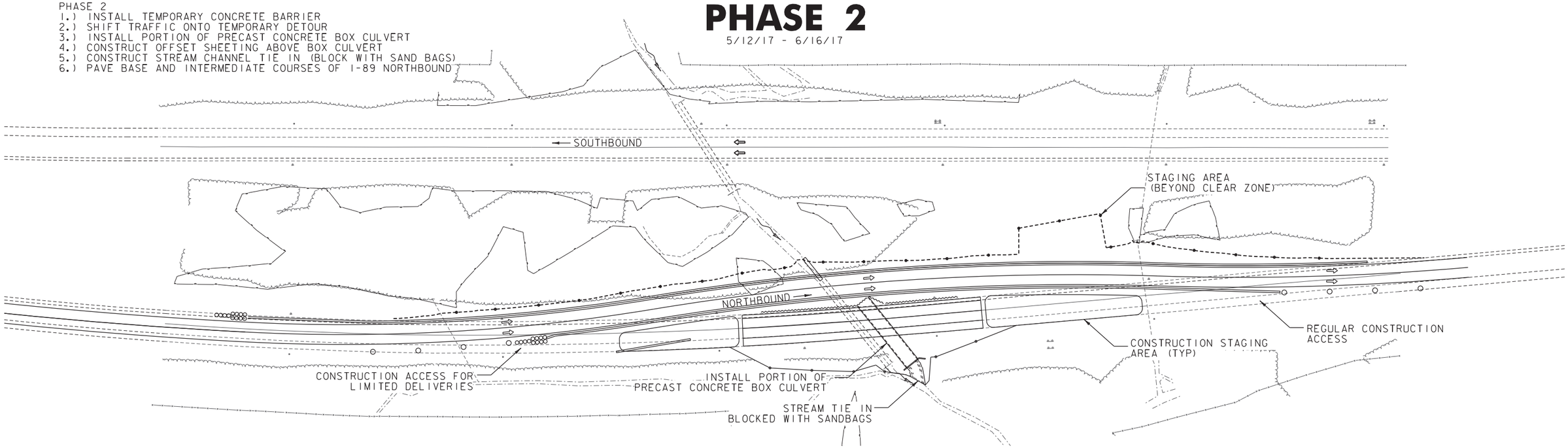

0 60 120
SCALE IN FEET

Stantec

PROJECT NAME: SOUTH BURLINGTON	
PROJECT NUMBER: IM CULV(24)	
FILE NAME: z11a216bdr_phasing.dgn	PLOT DATE: 5/19/2016
PROJECT LEADER: G. BOGUE	DRAWN BY: I. MAYNARD
DESIGNED BY: I. MAYNARD	CHECKED BY: G. EDWARDS
64 - SEQUENCING - PHASES 1& 2	SHEET 79 OF 135

PHASE 3

6/16/17 - 8/10/17

PHASE 3 (NIGHT WORK 8:00PM TO 6:00AM)
1.) SHIFT NORTHBOUND TRAFFIC BACK TO I-89 LANES
2.) NIGHT TIME CLOSURE OF NORTHBOUND AND SOUTHBOUND LEFT LANES
3.) CONSTRUCT REMAINING NORTHBOUND PRECAST CONCRETE BOX CULVERT
4.) CONSTRUCT STREAM CHANNEL TIE IN & REVEGETATION
5.) CONSTRUCT MEDIAN HAUL ROAD
6.) CONSTRUCT SOUTHBOUND TEMPORARY CULVERT EXTENSION
7.) REMOVE NORTHBOUND TEMPORARY DETOUR WIDENING
8.) CONSTRUCT SOUTHBOUND TEMPORARY DETOUR WIDENING
9.) INSTALL TEMPORARY CONCRETE BARRIER AND CONSTRUCT TEMPORARY SHEET PILING
10.) PLUG AND ABANDON EXISTING NORTHBOUND CULVERT WITH FLOWABLE FILL

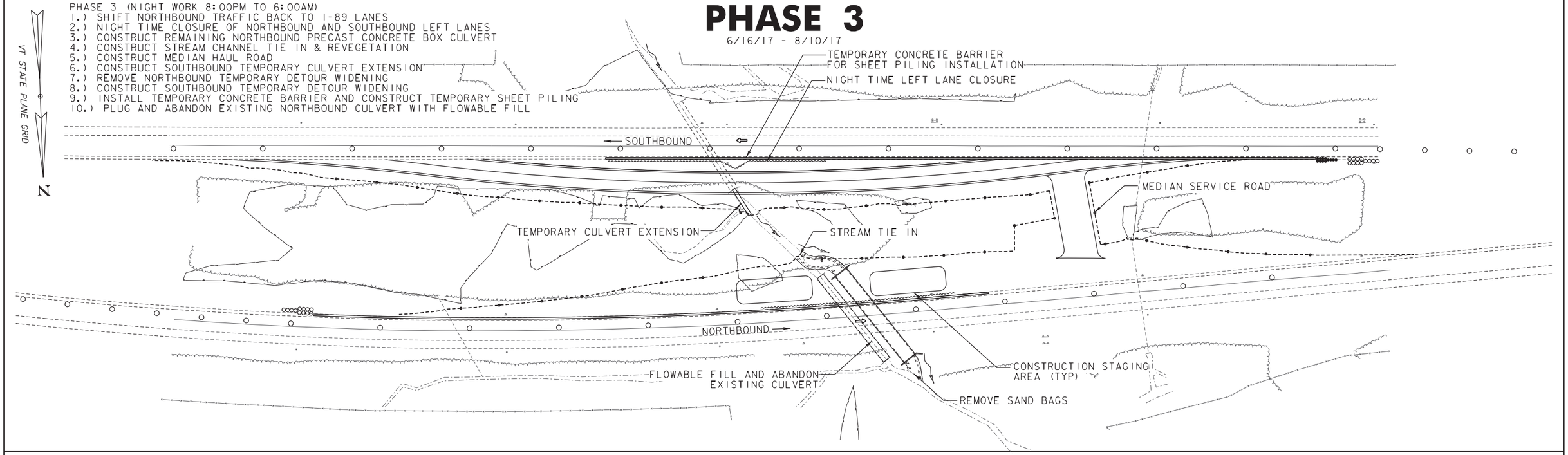

PHASE 4

8/10/17 - 10/26/17

PHASE 4
1.) SHIFT TRAFFIC ONTO SOUTHBOUND DETOUR
2.) INSTALL PORTION OF SOUTHBOUND PRECAST CONCRETE BOX CULVERT
3.) INSTALL OFFSET SHEETING ABOVE BOX CULVERT
4.) CONSTRUCT STREAM CHANNEL TIE IN (CLOSE WITH SAND BAGS)
5.) PAVE BASE AND INTERMEDIATE COURSES OF I-89 SOUTHBOUND

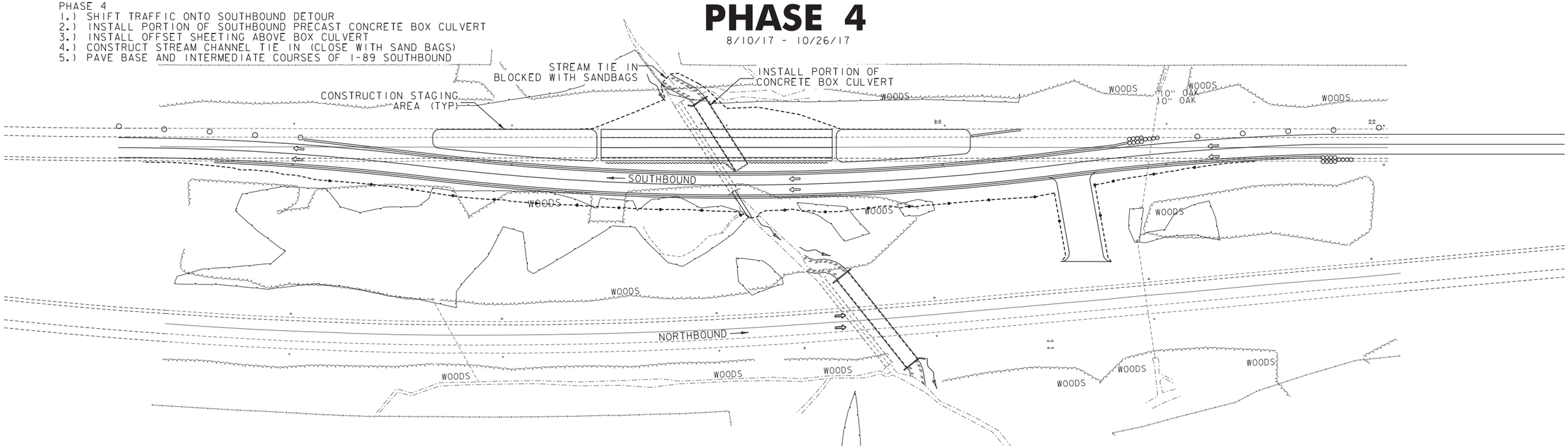

0 60 120
SCALE IN FEET

Stantec

PROJECT NAME: SOUTH BURLINGTON	
PROJECT NUMBER: IM CULV(24)	
FILE NAME: z11a216bdr_phasing.dgn	PLOT DATE: 5/19/2016
PROJECT LEADER: G. BOGUE	DRAWN BY: I. MAYNARD
DESIGNED BY: I. MAYNARD	CHECKED BY: G. EDWARDS
64 - SEQUENCING - PHASES 3 & 4	SHEET 80 OF 135

PHASE 5

10/26/17 - 11/1/17

PHASE 5 (NIGHT WORK 8:00PM TO 6:00AM)
1.) SHIFT SOUTHBOUND TRAFFIC BACK TO I-89 LANES
2.) NIGHT TIME CLOSURE OF SOUTHBOUND HIGH SPEED LANE
3.) REMOVE SOUTHBOUND TEMPORARY DETOUR WIDENING AND TEMPORARY CULVERT EXTENSION
4.) CONSTRUCT REMAINING SOUTHBOUND PRECAST CONCRETE BOX CULVERT
5.) CONSTRUCT STREAM TIE IN AND REVEGETATION
6.) PLUG AND ABANDON EXISTING CULVERT WITH FLOWABLE FILL

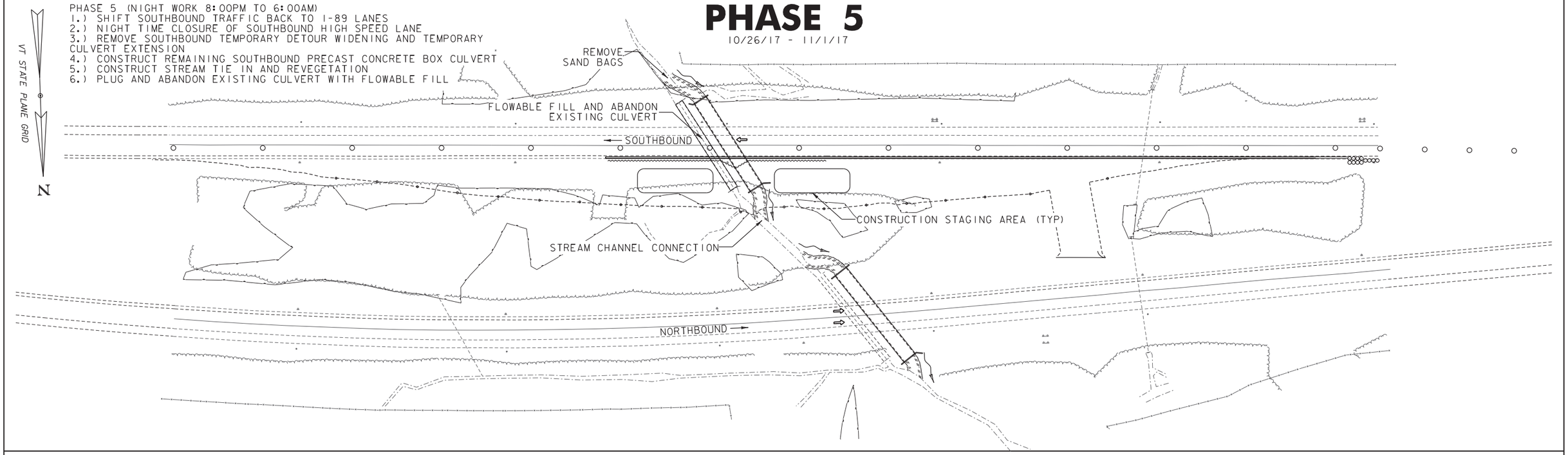

PHASE 6

11/1/17

PHASE 6 (NIGHT WORK 8:00PM - 6:00AM)
1.) MILL AND PAVE TOP COURSE NORTHBOUND AND SOUTHBOUND
2.) INSTALL FINAL PAVEMENT MARKINGS, SIGNS, DELINEATORS AND RUMBLE STRIPS

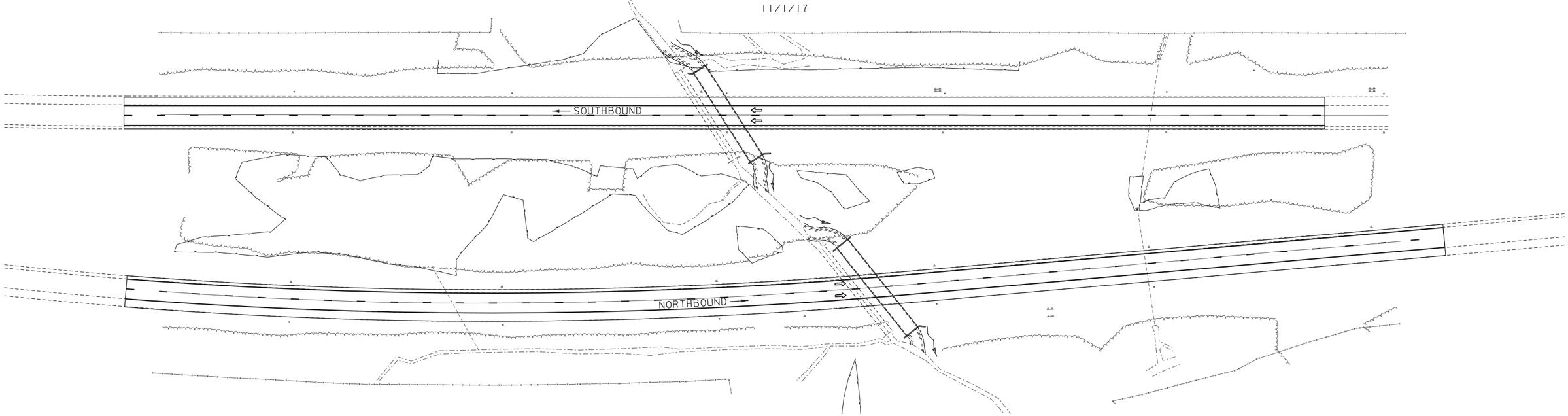

0 60 120
SCALE IN FEET

Stantec

PROJECT NAME: SOUTH BURLINGTON	
PROJECT NUMBER: IM CULV(24)	
FILE NAME: z11a216bdr_phasing.dgn	PLOT DATE: 5/19/2016
PROJECT LEADER: G. BOGUE	DRAWN BY: I. MAYNARD
DESIGNED BY: I. MAYNARD	CHECKED BY: G. EDWARDS
64 - SEQUENCING - PHASES 5 & 6	SHEET 81 OF 135

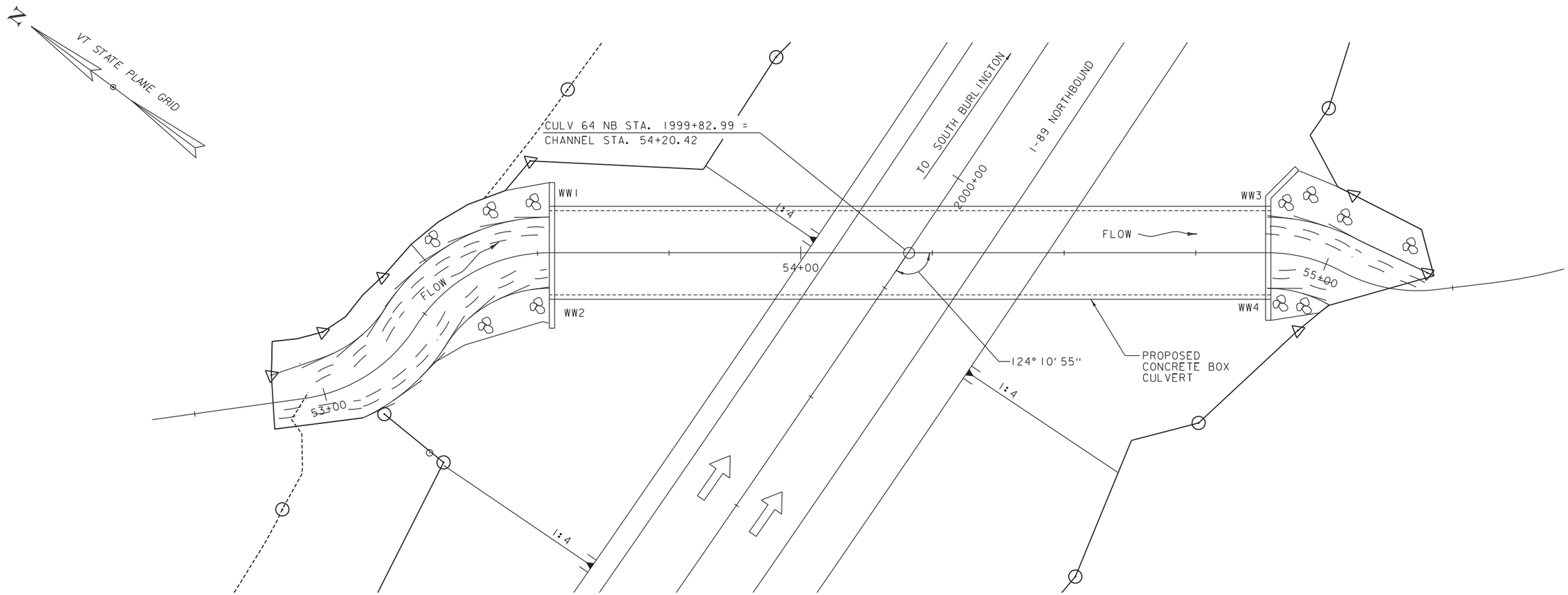

PLAN

SCALE 1" = 10'-0"

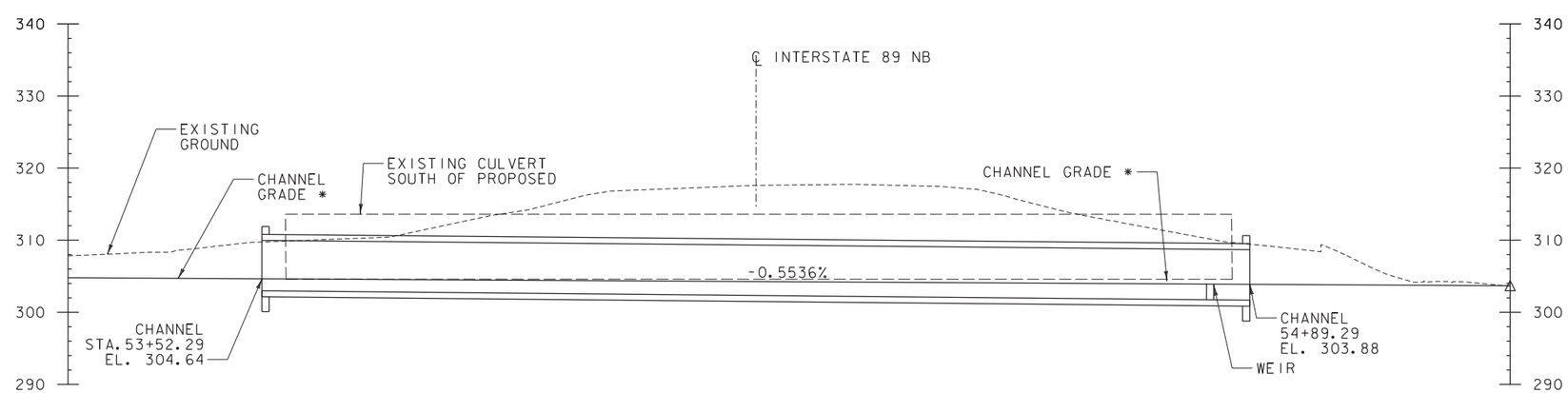

* SEE CHANNEL PROFILE SHEET

64-IN LONGITUDINAL SECTION ALONG CHANNEL LINE

SCALE 1" = 1'-0"

Stantec

PROJECT NAME: SOUTH BURLINGTON	
PROJECT NUMBER: IM CULV(24)	
FILE NAME: z11a216bdr_pe.dgn	PLOT DATE: 5/19/2016
PROJECT LEADER: G. BOGUE	DRAWN BY: I. MAYNARD
DESIGNED BY: T. KNIGHT	CHECKED BY: ------
NORTHBOUND PLAN/LONG. SECTION - 64	SHEET 103 OF 135

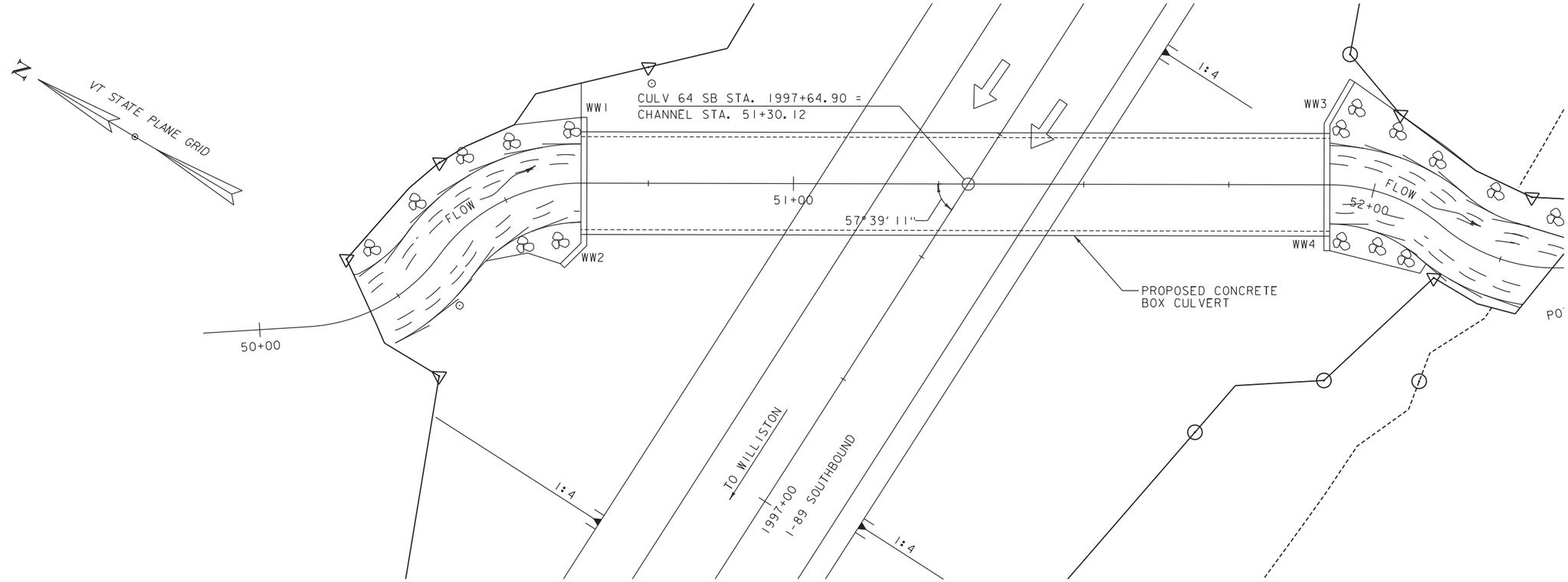

PLAN

SCALE 1" = 10'-0"

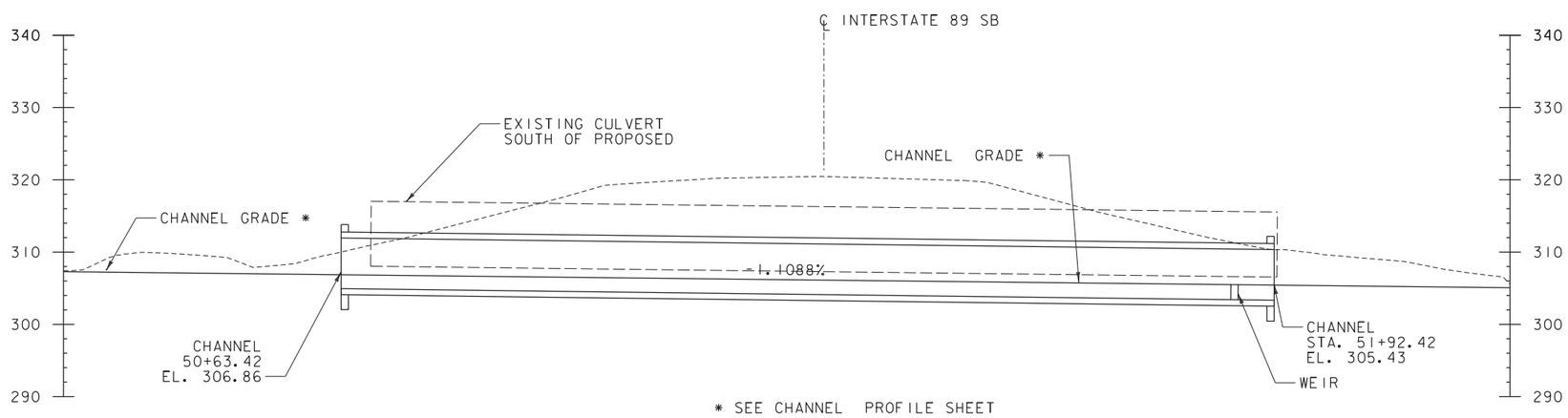

64-IS LONGITUDINAL SECTION ALONG CHANNEL LINE

SCALE 1" = 1'-0"

Stantec

PROJECT NAME: SOUTH BURLINGTON	
PROJECT NUMBER: IM CULV(24)	
FILE NAME: z11a216bdr_pe.dgn	PLOT DATE: 5/19/2016
PROJECT LEADER: G. BOGUE	DRAWN BY: I. MAYNARD
DESIGNED BY: T. KNIGHT	CHECKED BY: ------
SOUTHBOUND PLAN/LONG. SECTION - 64	SHEET 104 OF 135

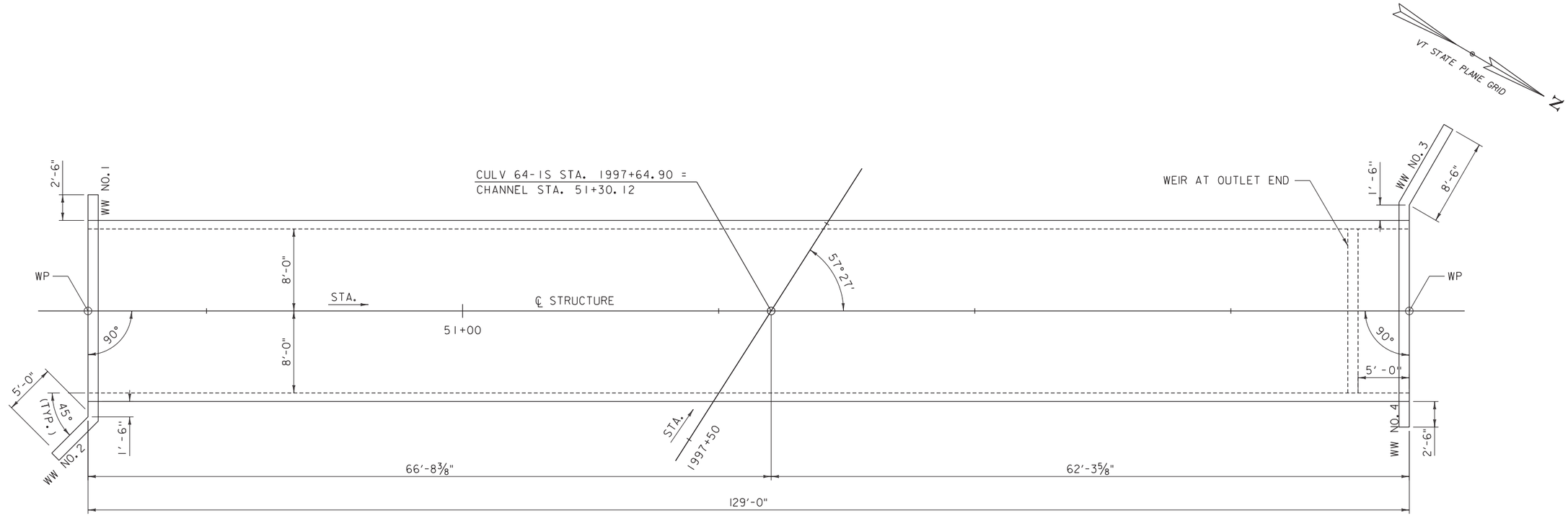

I-64 SOUTHBOUND LAYOUT

SCALE: 3/16" = 1'-0"

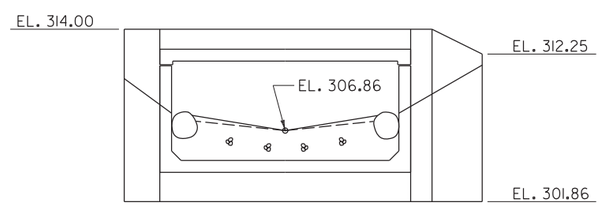

I-64 SOUTHBOUND - INLET ELEVATION

SCALE: 3/16" = 1'-0"

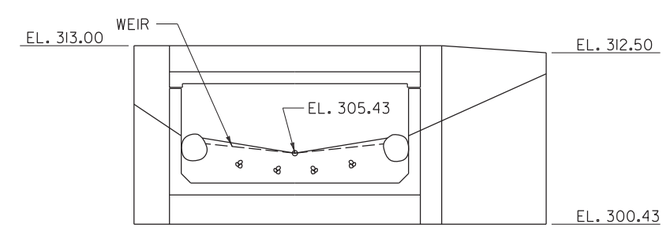

I-64 SOUTHBOUND - OUTLET ELEVATION

SCALE: 3/16" = 1'-0"

Stantec

PROJECT NAME: SOUTH BURLINGTON	
PROJECT NUMBER: IM CULV(24)	
FILE NAME: z11a216layout_64.dgn	PLOT DATE: 5/19/2016
PROJECT LEADER: G. BOGUE	DRAWN BY: J. SOTER
DESIGNED BY: T. KNIGHT	CHECKED BY: -------
STRUCTURE DETAILS - 64 SB	SHEET 105 OF 135

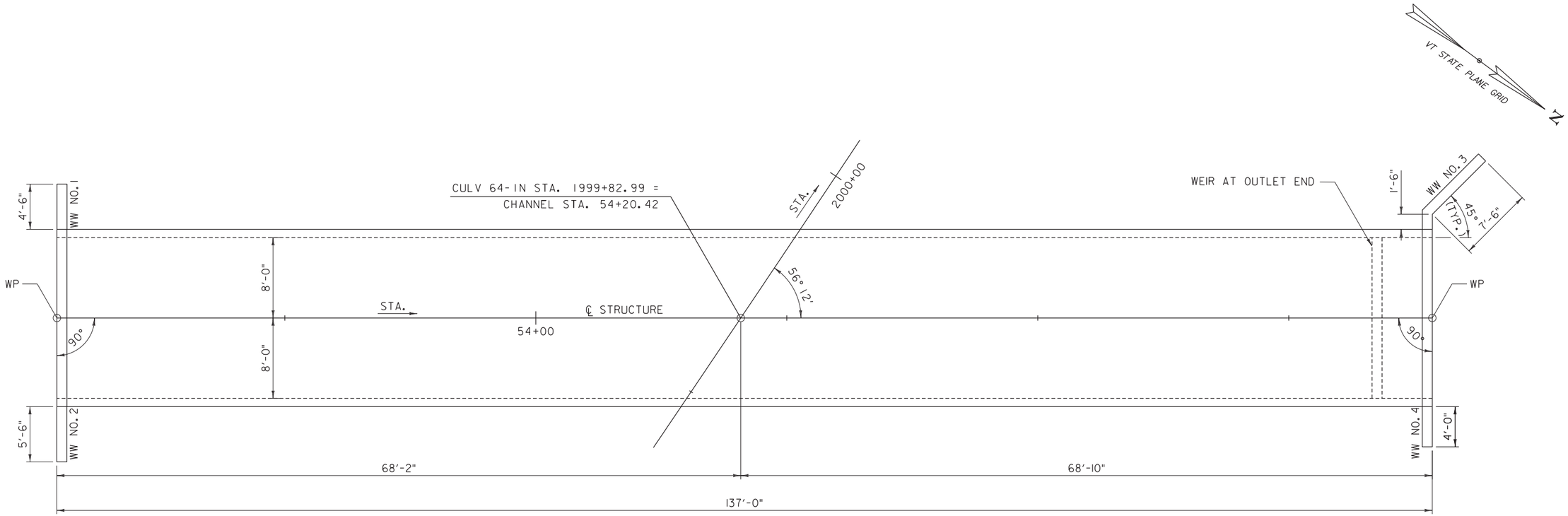

I-64 NORTHBOUND LAYOUT

SCALE: 3/16" = 1'-0"

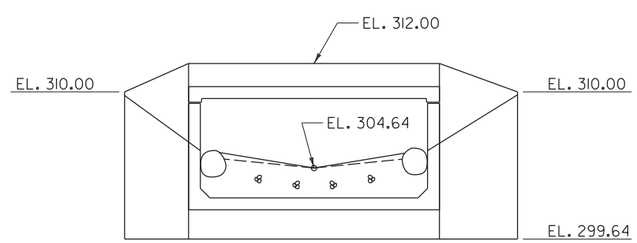

I-64 NORTHBOUND - INLET ELEVATION

SCALE: 3/16" = 1'-0"

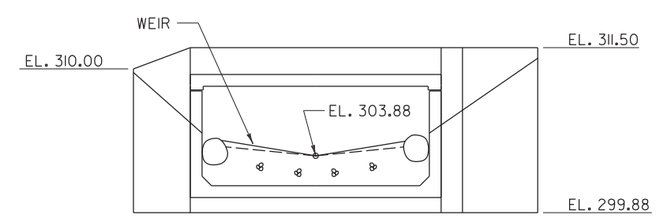

I-64 NORTHBOUND - OUTLET ELEVATION

SCALE: 3/16" = 1'-0"

Stantec

PROJECT NAME: SOUTH BURLINGTON	
PROJECT NUMBER: IM CULV(24)	
FILE NAME: z11a216layout_64.dgn	PLOT DATE: 5/19/2016
PROJECT LEADER: G. BOGUE	DRAWN BY: J. SOTER
DESIGNED BY: T. KNIGHT	CHECKED BY: -------
STRUCTURE DETAILS - 64 NB	SHEET 106 OF 135